Italiano

English

COLTRI COMPRESSORS

MADE IN ITALY

HIGH PRESSURE COMPRESSORS FOR PURE BREATHING AIR AND TECHNICAL GASES
COMPRESSORE AD ALTA PRESSIONE PER ARIA RESPIRABILE E GAS TECNICI

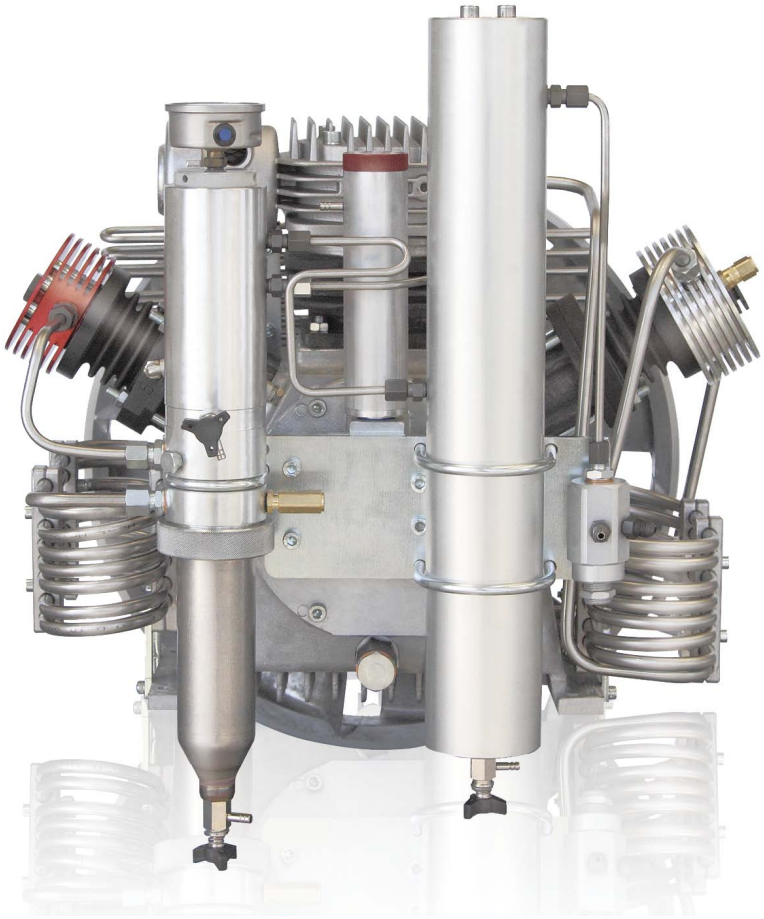

CATALOGO RICAMBI
SPARE PARTS LIST

MCH-8-11-13-16

Indice	Index	Pag.
Flange/Ventola	Flange/Cooling fan	4
Livello olio (Standard-Tech-Minitech)	Oil level (Standard-Tech-Minitech)	6
Livello olio (Compact-MiniSilentEvo-SuperSilentEvo-26-32 Compact)	Oil level (Compact-MiniSilentEvo-SuperSilentEvo-26-32 Compact)	8
Livello olio Mark2	Oil level Mark2	10
1° Stadio MCH-8	1st Stage MCH-8	12
1° Stadio MCH-11-13	1st Stage MCH-11-13	14
1° Stadio MCH-16-18	1st Stage MCH-16-18	16
2° Stadio MCH-8-11-13	2nd Stage MCH-8-11-13	18
2° Stadio MCH-16-18	2nd Stage MCH-16-18	20
3° Stadio G3 (per modelli dal 03-2014)	3rd Stage G3 (for models by 03-2014)	22
3° Stadio G2 (per modelli fino al 03-2014)	3rd Stage G2 (for models up to 03-2014)	24
Circuito di Pressione	Pressure Circuit	26
Circuito di pressione (Tropical - Tropical Plus)	Pressure circuit (Tropical - Tropical Plus)	28
Kit guarnizioni gruppo pompante	Kit gaskets pumping group	30
Staffe di fissaggio	Brackets fixing	32
Separatore di condensa	Condensate separator	34
Maxifiltro depuratore	Maxifiltro purifier	36
Hyperfilter depuratore	Hyperfilter purifier	38
Hyperfilter depuratore con presec	Hyperfilter purifier with presec	40
Valvola di sicurezza	Safety valve	42
Valvola mantenimento pressione	Pressure maintenance valve	42
Circuito di filtrazione (Standard - MiniTech)	Filtering circuit (Standard - MiniTech)	44
Circuito di filtrazione (Tech)	Filtering circuit (Tech)	46
Circuito di filtrazione (Compact)	Filtering circuit (Compact)	48
Circuito di filtrazione (Compact Evo)	Filtering circuit (Compact Evo)	50
Circuito di filtrazione (Mini Silent)	Filtering circuit (Mini Silent)	52
Circuito di filtrazione (Mini Silent Evo)	Filtering circuit (Mini Silent Evo)	54
Circuito di filtrazione (Super Silent Evo)	Filtering circuit (Super Silent Evo)	56
Circuito di filtrazione (MCH-26-32/ET Compact)	Filtering circuit (MCH-26-32/ET Compact)	58
Circuito di filtrazione (Super Silent Evo Tropical Plus)	Filtering circuit (Super Silent Evo Tropical Plus)	60
Circuito di filtrazione (Mark2)	Filtering circuit (Mark2)	62
Scarico condensa (Standard - Tech - MiniTech)	Condensate discharge (Standard - Tech - MiniTech)	64
Scarico condensa (Compact - Compact Evo)	Condensate discharge (Compact - Compact Evo)	66
Scarico condensa (Mini Silent - Mini Silent Evo)	Condensate discharge (Mini Silent - Mini Silent Evo)	68
Scarico condensa (Super Silent Evo)	Condensate discharge (Super Silent Evo)	70
Scarico condensa (MCH-26-32/ET Compact)	Condensate discharge (MCH-26-32/ET Compact)	72
Scarico condensa (Super Silent Evo Tropical Plus)	Condensate discharge (Super Silent Evo Tropical Plus)	74
Scarico condensa (Mark2)	Condensate discharge (Mark2)	76
Telaio (Standard EM-ET)	Frame (Standard EM-ET)	78
Telaio (Tech)	Frame (Tech)	80
Telaio (MiniTech SH-DL-DY)	Frame (MiniTech SH-DL-DY)	82
Telaio (Compact-Compact Evo)	Frame (Compact-Compact Evo)	84
Telaio (26-32 Compact)	Frame (26-32 Compact)	86
Telaio (Super Silent Evo-Super Silent Evo Tropical Plus)	Frame (Super Silent Evo-Super Silent Evo Tropical Plus)	88
Telaio (Mini Silent-Mini Silent Evo)	Frame (Mini Silent-Mini Silent Evo)	90
Telaio (Mark2)	Frame (Mark2)	92
Targhette di sicurezza	Safety info label	94
Puleggia motore/Cinghia di trasmissione	Engine pulley/Transmission belt	96
Componenti elettrici - Quadro di comando remoto Attacchi per ricarica bombole - Olio di lubrificazione e grasso	Electrical components - Automatic switchboard Bottle refill connectors - Lubrication oil and grease	98

Distinta List	Modello Model	Codice Code
GRUPPO POMPANTE PUMPING GROUP	MCH-8 STANDARD	SC000149
	MCH-8 COMPACT	SC000188
	MCH-11 STANDARD	SC000168
	MCH-11 COMPACT	SC0000120
	MCH-13 STANDARD CON FILTRI	SC000168
	MCH-13 STANDARD CON FILTRI SPECIALE	SC000168/S
	MCH-13 COMPACT	SC0000120
	MCH-13 COMPACT EVO	SC0000121
	MCH-13 MINISILENT	SC0000124
	MCH-13 SUPER SILENT EVO	SC0000123
	MCH-13 COMPACT DOPPIO	SC0000122
	MCH-13 TROPICAL	SC000050
	MCH-13 TROPICAL PLUS	SC000060
	MCH-16 STANDARD CON FILTRI	SC000221
	MCH-16 STANDARD CON FILTRI SPECIALE	SC000221/S
	MCH-16 COMPACT	SC0000125
	MCH-16 COMPACT EVO	SC0000126
	MCH-16 MINISILENT	SC0000129
	MCH-16 SUPER SILENT EVO	SC0000128
	MCH-16 COMPACT DOPPIO	SC0000127
	MCH-16 TROPICAL	SC000055
	MCH-16 TROPICAL PLUS	SC000065
	MCH-18 STANDARD	SC000221
	MCH-18 TROPICAL	SC000055
	MCH-18 TROPICAL PLUS	SC000065

I prezzi indicati nel presente listino sono IVA ESCLUSA.
La resa della merce È FRANCO nostra fabbrica - trasporto escluso.
All prices herewith listed are vat excluded.
Delivery terms : ex work our company.

I dati riportati nel presente catalogo non sono impegnativi. AEROTECNICA COLTRI SpA si riserva di modificare i dati in qualsiasi momento.
AEROTECNICA COLTRI SpA reserves the right of amending the data contained in this catalogue at any time.

FLANGE/VENTOLA - FLANGE/COOLING FAN

Rif. Pos.	Q.tà Q.ty	Codice Code	Descrizione	Description
KIT1a	1	13-00-0050/R	KIT FLANGIA LATO FILTRI MCH13/16	FILTER SIDE FLANGE MCH13/16 KIT
KIT1b	1	13-00-0050/TR/R	KIT FLANGIA LATO FILTRI MCH13/16 PER TROPICAL	FILTER SIDE FLANGE MCH13/16 FOR TROPICAL KIT
1.1a	1		FLANGIA LATO FILTRI MCH13/16	FILTER SIDE FLANGE MCH13/16
1.1b	1		FLANGIA LATO FILTRI MCH13/16 PER TROPICAL	FILTER SIDE FLANGE MCH13/16 FOR TROPICAL
1.2	1		O-RING 2562 NBR 90SH FLANGIA	FLANGE O-RING 2562
1.3	1		CUSCINETTO RULLI FLANGIA NU305	FLANGE ROLLER BEARING NU305
1.4	1		ANELLO ELASTICO SEEGER J 62 DIN 472	SEEGER RETAINING RING J 62
1.5	1		FLANGIA MEZZALUNA DIAM. 140X80 SP. 10/10	HALF MOON FLANGE 140X80 SP. 10/10 MCH13/16
1.6	6		VITE 8X25 T.C.E. ZINC. DIN 912	SCREW 8X25 T.C.E. ZINC. DIN 912
1.7	2		DADO ZINCATO AUTOBLOC. M6 ALTO	SELF LOCKING NUT M6 HIGH
1.8	2		VITE 6X35 T.C.E. ZINC. DIN 912	SCREW 6X35 T.C.E. ZINC. DIN 912
1.9	2		VITE T.C.E. ZINCATA 8X30	SCREW T.C.E. ZINCATA 8X30
1.10	1		TAPPO 1/2 (ROSSO) CARICO OLIO MCH13/16	OIL FILLING CAP 1/2 (RED) MCH13/16
1.11	0,3		TUBO RILSAN 6X4	RILSAN HOSE 6X4
1.12	1		RACCORDO INFERIORE TUBO CARICO OLIO	LOWER OIL CHARGE TUBE FITTING MCH13/16
1.13	1		TUBO CARICO OLIO MCH13-16	OIL FILLING TUBE MCH13/16
1.14	2		O-RING 3137 NBR 90SH (34.60X2.62)	O-RING 3137 NBR 90SH (34.60X2.62)
KIT2a	1	13-00-0071/R	KIT FLANGIA LATO VENTOLA+COLLO D'OCA MCH 13/16	FAN SIDE FLANGE+CRANKSHAFT MCH13-16 KIT
KIT2b	1	13-00-0071/TR/R	KIT FLANGIA LATO VENTOLA+COLLO D'OCA MCH 13/16 X TROPICAL PLUS	FAN SIDE FLANGE+CRANKSHAFT MCH13-16 TROPICAL PLUS KIT
2.1	1		VITE T.C.E. ZINCATA 8X65	8X65 TCE SCREW
2.2	1		DADO ZINCATO AUTOBLOC. M8 ALTO	8MM SELF-LOCKING NUT
2.3	1		CONTRAPPESO MCH13	COUNTERWEIGHT
2.4	3		ANELLO TEMPRATO LR 30X35X16,5	HARDENED RING LR 30X35X16,5
2.5	1		COLLO D'OCA MCH13/16	CRANKSHAFT MCH13/16
2.6	1		CHIAVETTA MM.8X7X25	KEY MM.8X7X25
2.7	1		ANELLO ELASTICO SEEGER A30 30X1,5	SEEGER RETAINING RING A30 30X1,5
2.8	1		RONDELLA PIANA M10 ZINCATA	WASHER M10
2.9	1		VITE 10X40 T.C.E. ZINC.	SCREW 10X40 T.C.E. ZINC.
2.10a	1		FLANGIA LATO VENTOLA MCH 13/16	FAN SIDE FLANGE MCH13-16
2.10b	1		FLANGIA LATO VENTOLA MCH 13/16 X TROPICAL PLUS	FAN SIDE FLANGE MCH13-16 TROPICAL
2.11	1	13-00-0070/N	CUSCINETTO A RULLI NUP 206 C3	ROLLER BEARING NUP 206 C3
2.12	1		O-RING 2562 NBR 90SH FLANGIA	FLANGE O-RING 2562
2.13	1		ANELLO ELASTICO SEEGER J 62 DIN 472	SEEGER RETAINING RING J 62
2.14	4		VITE 8X25 T.C.E. ZINC. DIN 912	SCREW 8X25 T.C.E. ZINC. DIN 912
2.15	1	13-00-0173/D	PARAOLIO DOPPIO LABBRO 30X48X8	OIL SPLASH GUARD 30-48-8
2.16	2		VITE T.C.E. ZINCATA 8X30	SCREW T.C.E. ZINCATA 8X30
KIT3	1	13-01-0107/R	KIT BIELLA PRIMO/TERZO STADIO MCH13/16	1ST/3RD STAGE CON-ROD ASS.BLY KIT
3.1	1		GABBIA A RULLI HK2020 AS1	BEARING ROLLER
3.2	1		ANELLO TEMPRATO IR 42X47X15,1 INTERNO BIELLA	HARDENED RING IR 42X47X15,1
3.3	1		GABBIA A RULLI 35X42X16-AH	BEARING ROLLER
3.4	1		BIELLA PRIMO/TERZO STADIO MCH13/16	1ST/3RD STAGE CON-ROD
3.5	1		RALLA AS 3552	SPACER
KIT4	1	13-00-0105/R	KIT BIELLA SECONDO STADIO MCH13/16	2ND STAGE CON-ROD ASS.BLY MCH13/16 KIT
4.1	1		GABBIA A RULLI HK2020 AS1	BEARING ROLLER
4.2	1		ANELLO TEMPRATO IR 42X47X15,1 INTERNO BIELLA	HARDENED RING IR 42X47X15,1
4.3	1		GABBIA A RULLI 35X42X16-AH	BEARING ROLLER
4.4	1		BIELLA SECONDO STADIO MCH13/16	2ND STAGE CON-ROD
4.5	1		RALLA AS 3552	SPACER
5	1	13-00-0074	MOZZO PORTAVENTOLA MCH13/16	FAN-HOLDING HUB MCH13/16
6	1	13-00-0077	VENTOLA DI RAFFREDDAMENTO MCH13/16	COOLING FAN WHEEL MCH13-16
7	1	13-00-0082	FLANGIA VENTOLA MCH13/16	COOLING FAN FLANGE MCH13/16
8	1	RON10ZG	RONDELLA PIANA M10 ZINCATA	WASHER M10
9	1	VITE1045Z	VITE T.C.E. ZINC. 10X45	SCREW 10X45 T.C.E. ZINC.
10	4	13-00-0079	RONDELLA PIANA M12 ZINC. (12,5X24X2,5)	WASHER M12
11	4	13-00-0080	VITE 12X35 T.C.E. ZINC. DIN912	SCREW 12X35 T.C.E. ZINC. DIN912

FLANGE/VENTOLA - FLANGE/COOLING FAN

3° STADIO - 3rd STAGE
KIT3-13-01-0107/R

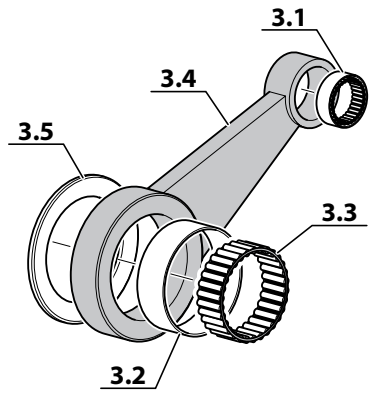

1° STADIO - 1st STAGE
KIT3-13-01-0107/R

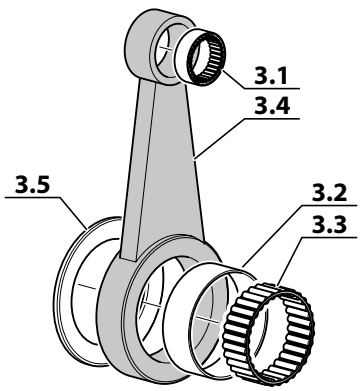

2° STADIO - 2nd STAGE
KIT4-13-00-0105/R

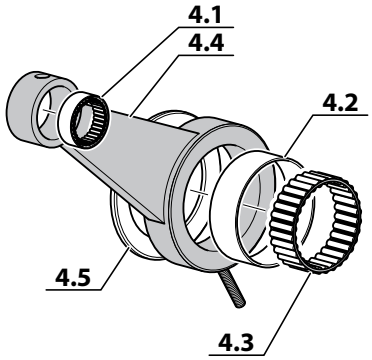

KIT 1a - 13-00-0050/R
KIT 1b - 13-00-0050/TR/R

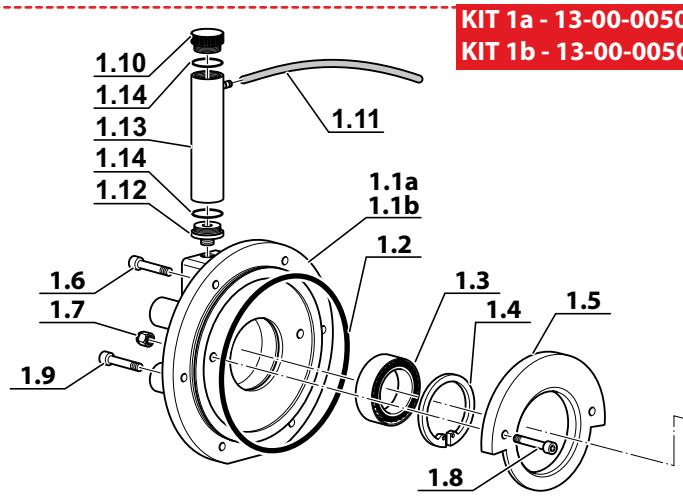

Senso di montaggio biella II° stadio
Direction of assembly 2nd stage connecting-rod

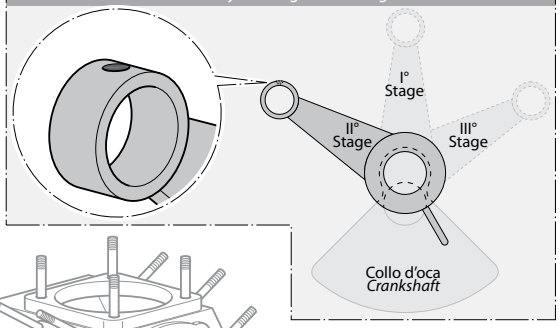

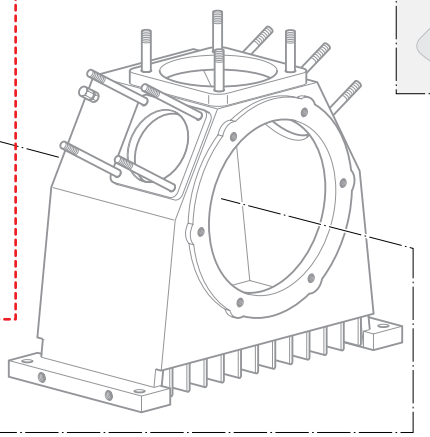

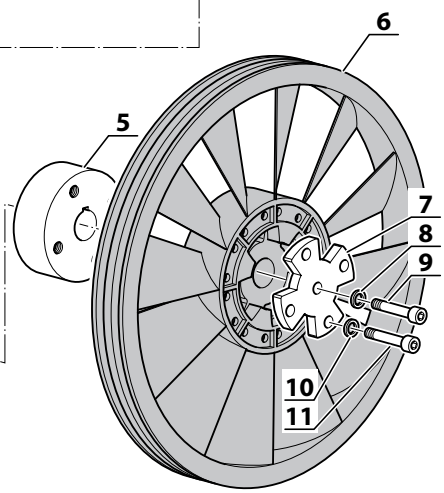

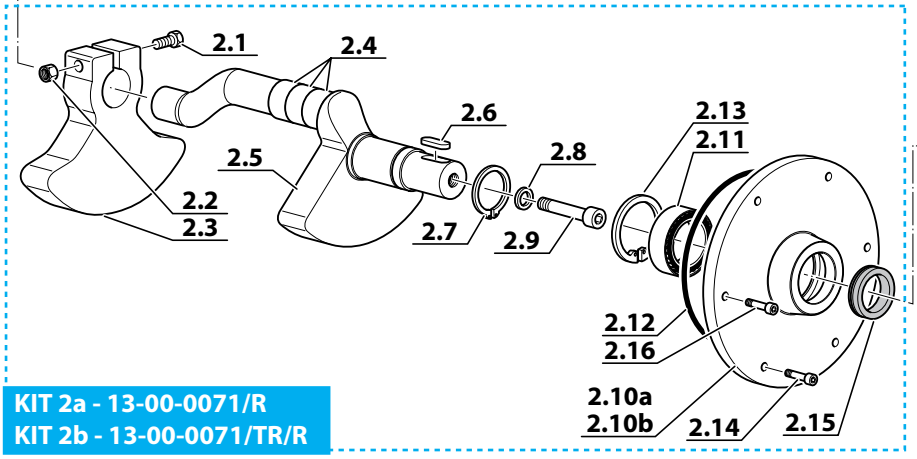

KIT 2a - 13-00-0071/R
KIT 2b - 13-00-0071/TR/R

LIVELLO OLIO - OIL LEVEL

Mod: Standard - Tech - Minitech

Rif. Pos.	Q.tà Q.ty	Codice Code	Descrizione	Description
KIT1	1	13-00-0052/R	KIT PROLUNGA SCARICO OLIO	KIT FITTING FOR OIL DISCHARGE
1.1	1	13-00-0052	PROLUNGA SCARICO OLIO	FITTING FOR OIL DISCHARGE
1.2	1	13-00-0053	GUARNIZIONE RAME 21,5X28X1,5	COPPER GASKET 21,5X28X1,5
1.3	1	13-00-0063	TAPPO SCARICO OLIO	OIL DRAIN PLUG
2	1	13-00-0021	RACCORDO 90° 1/8 NPT	FITTING 90° 1/8 NPT
3	1	13-00-0064	TUBO CONTROLLO LIVELLO OLIO	OIL LEVEL CHECK TUBE MCH13/16
4	1	13-00-0063/NPT	TAPPO OIL ALERT 1/2-14 NPT - MCH-13/16	OIL ALERT 1/2-14 NPT - MCH-13/16 PLUG
5	1	13-00-0068	VISORE LIVELLO OLIO CON GUARNIZIONE	OIL LEVEL VIEWER WITH GASKET
6	1	SC000334	SENSORE LIVELLO OLIO	OIL LEVEL SWITCH

LIVELLO OLIO - OIL LEVEL

Mod: Standard - Tech - Minitech

1 - For models up to 12-2013

Model: Standard - Tech - Minitech

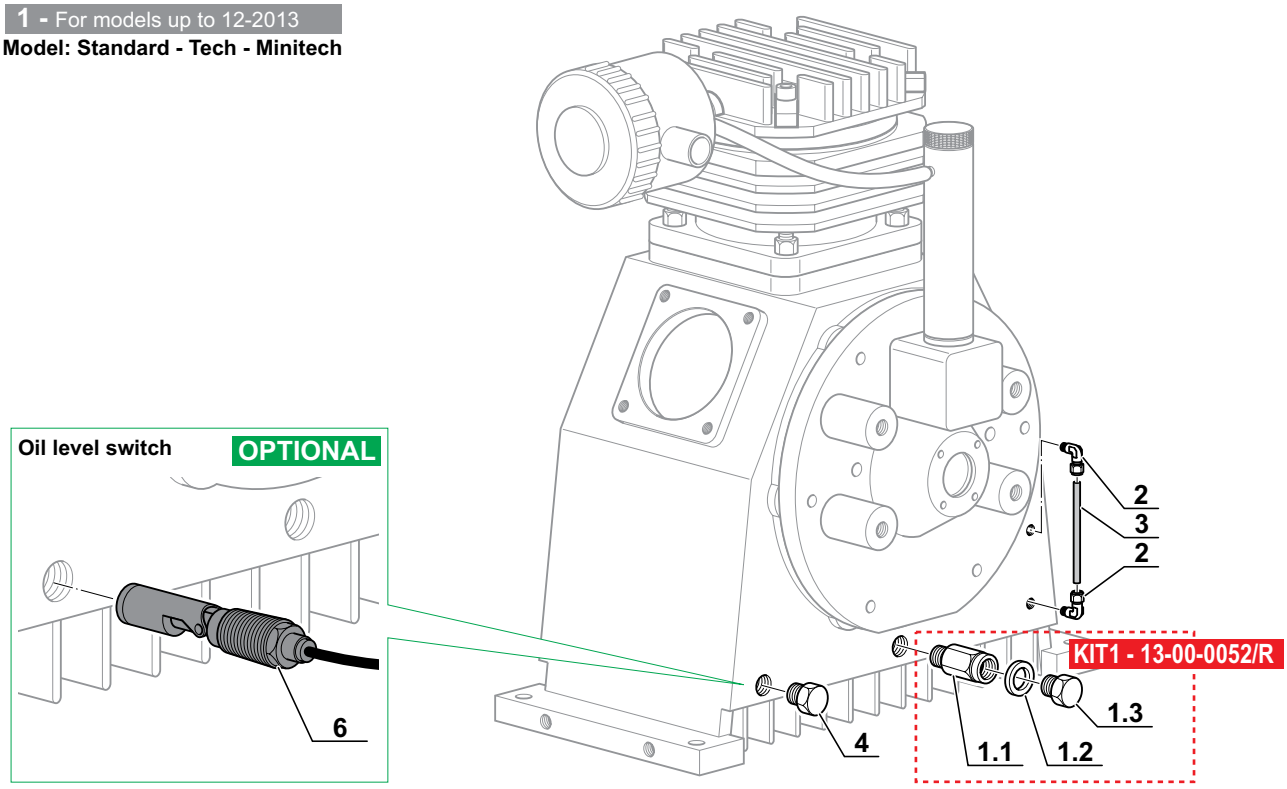

2 - for models build after 12-2013

Model: Standard - Tech - Minitech

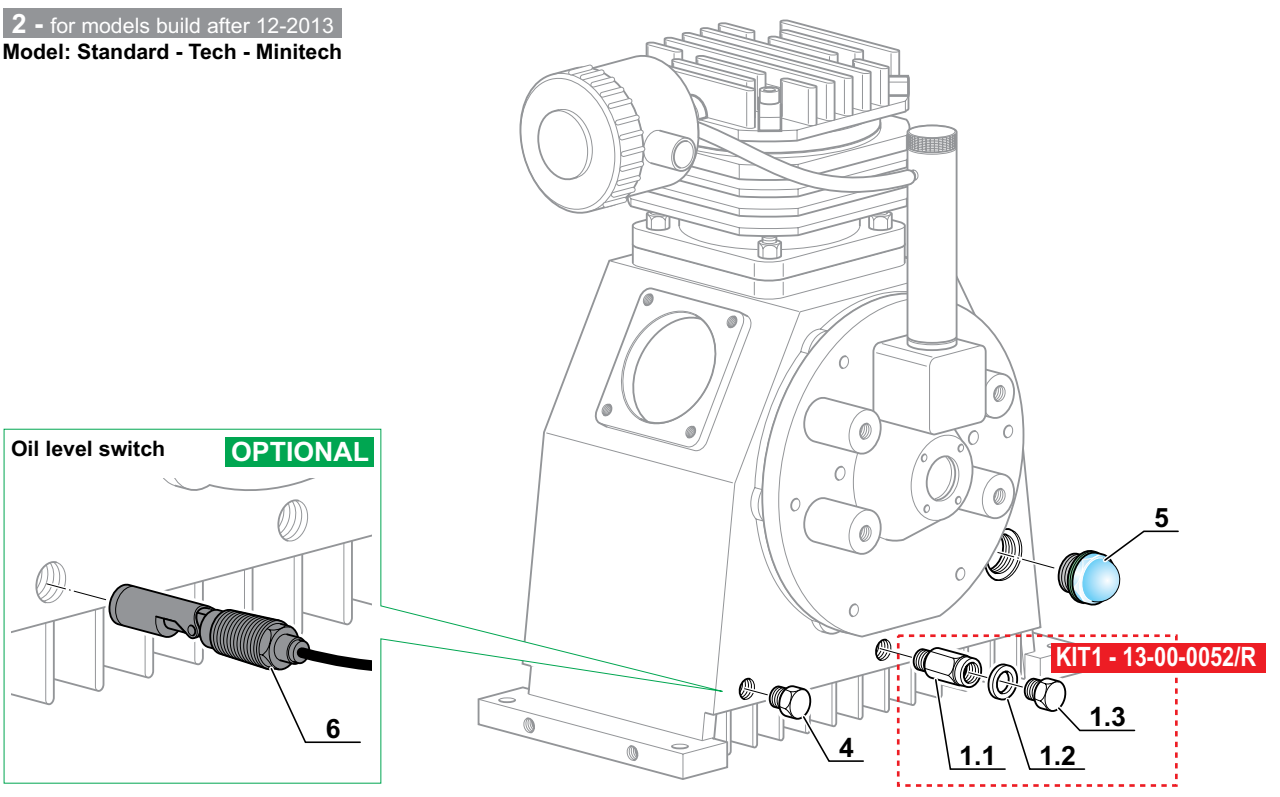

LIVELLO OLIO - OIL LEVEL

Mod: Compact - Compact Evo - MiniSilent Evo - SuperSilent Evo - MCH 26-32/ET Compact

Rif. Pos.	Q.tà Q.ty	Codice Code	Descrizione	Description
KIT1	1	LIVELLO/OLIO/R	KIT LIVELLO OLIO MCH-13-16	KIT OIL LEVEL MCH-13-16
1.1	2		RACCORDO 90° 1/8 NPT	FITTING 90° 1/8 NPT
1.2	0		TUBO CONTROLLO LIVELLO OLIO	OIL LEVEL CHECK TUBE MCH13/16
1.3	0		TUBO SCARICO OLIO MCH13/16 COMPACT	OIL DRAIN TUBE MCH13/16 COMPACT
1.4	1		RACCORDO INFER. LIVELLO OLIO	LOWER OIL LEVEL FITTING
1.5	2		FASCETTA STRING. 2 D10/18	CLAMP 2 D10/18
1.6	2		RACCORDO G1/2 M. - PORTAGOMMA	FITTING G1/2 M.
1.7	4		FASCETTA STRING. 3B D.17/29	CLAMP 3B D.17/29
1.8	2		RACCORDO 1/2 PORTATUBO	1/2 CARRIER FITTING
1.9	1		RACCORDO A T 1/2" F	T FITTING 1/2" F
1.10	0		TUBO LIVELLO OLIO	OIL LEVEL TUBE
1.11	2		RACCORDO SUP. LIVELLO OLIO	OIL LEVEL UPPER FITTING
1.12	2		GUARNIZIONE LIVEL.OLIO 10X20X3	10X20X3 OIL LEVEL GASKET
1.13	1		TAPPO 1/2" SCARICO OLIO	OIL DRAIN PLUG 1/2"
1.14	1		LIVELLO OLIO PER MCH-13-16	OIL LEVEL FOR MCH-13-16
1.15	1		RACCORDO M-M 1/2"	FITTING M-M 1/2"
1.16	1		RUBINETTO SCARICO OLIO MCH13/16	OIL DRAIN VALVE MCH13/16
1.17	1		GUARNIZIONE RAME 21,5X28X1,5	COPPER GASKET 21,5X28X1,5

KIT2	1	LIVELLO/OLIO-2/R	KIT LIVELLO OLIO MCH-26-32	KIT OIL LEVEL MCH-26-32
2.1	2		RACCORDO 90° 1/8 NPT	FITTING 90° 1/8 NPT
2.2	0		TUBO CONTROLLO LIVELLO OLIO	OIL LEVEL CHECK TUBE MCH13/16
2.3	2		FASCETTA STRING. 2 D10/18	CLAMP 2 D10/18
2.4	2		RACCORDO A T FXFXF 1/2	T FITTING FXFXF 1/2
2.5	1		GUARNIZIONE RAME 21,5X28X1,5	COPPER GASKET 21,5X28X1,5
2.6	2		RACCORDO G1/2 M. - PORTAGOMMA	FITTING G1/2 M.
2.7	4		FASCETTA STRING. 3B D.17/29	CLAMP 3B D.17/29
2.8	1		RACCORDO INFER. LIVELLO OLIO	LOWER OIL LEVEL FITTING
2.9	1		RACCORDO A T 1/2" F	T FITTING 1/2" F
2.10	2		RACCORDO M-M 1/2"	FITTING M-M 1/2"
2.11	2		RACCORDO SUP. LIVELLO OLIO	OIL LEVEL UPPER FITTING
2.12	2		GUARNIZIONE LIVEL.OLIO 10X20X3	10X20X3 OIL LEVEL GASKET
2.13a	0,75		TUBO SPIRALATO PER ALIMENTI 16X23 L=750	FOOD SPIRAL HOSE 16X23 L=750
2.13b	1,4		TUBO SPIRALATO PER ALIMENTI 16X23 L=1400	FOOD SPIRAL HOSE 16X23 L=1400
2.14	1		LIVELLO OLIO PER MCH-13-16	OIL LEVEL FOR MCH-13-16
2.15	1		TAPPO OLIO 3/4 NERO	OIL PLUG 3/4 BLACK
2.16	1		RUBINETTO SCARICO OLIO MCH13/16	OIL DRAIN VALVE MCH13/16
2.17	1		RACCORDO F 3/4 F 1/2 X TAPPO	PLUG F 3/4 F 1/2 X FITTING
2.18	1		TAPPO 1/2" SCARICO OLIO	OIL DRAIN PLUG 1/2"
2.19	0		TUBO SCARICO OLIO MCH13/16 COMPACT	OIL DRAIN TUBE MCH13/16 COMPACT
2.20	1		TUBO LIVELLO OLIO	OIL LEVEL TUBE
2.21	1		RACCORDO 1/2 PORTATUBO	1/2 CARRIER FITTING

LIVELLO OLIO - OIL LEVEL

Mod: Compact - Compact Evo - MiniSilent Evo - SuperSilent Evo - MCH 26-32/ET Compact

Model: Compact - Compact Evo - MiniSilent Evo - SuperSilent Evo

KIT1 - LIVELLO/OLIO/R

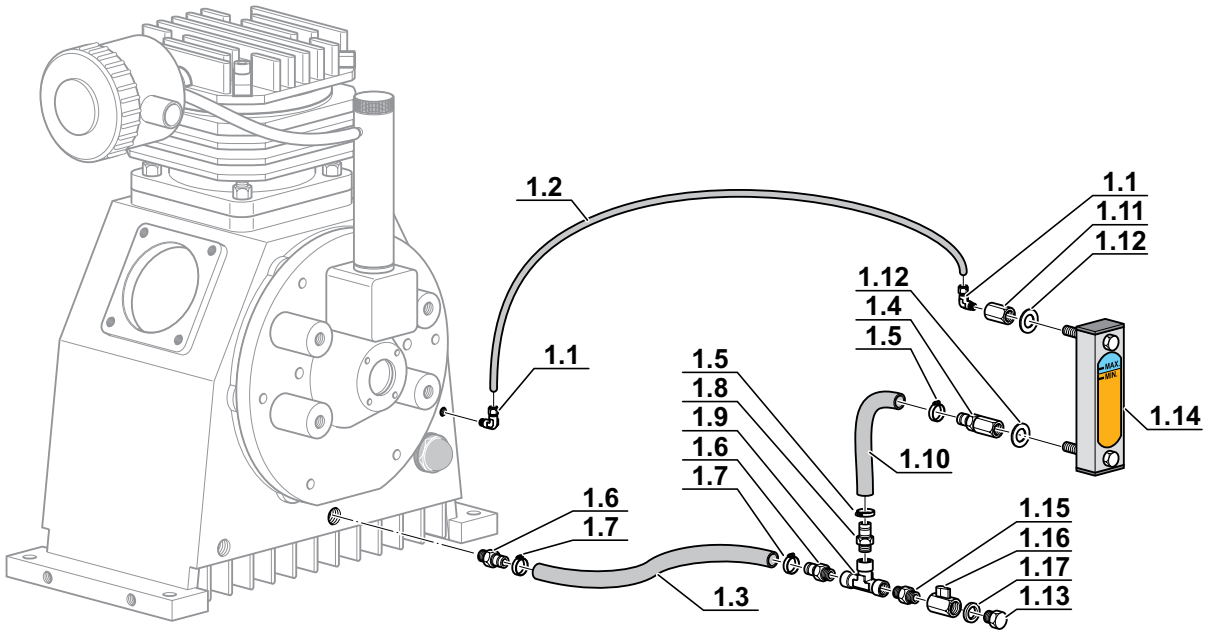

Model: MCH 26-32/ET Compact

KIT2 - LIVELLO/OLIO-2/R

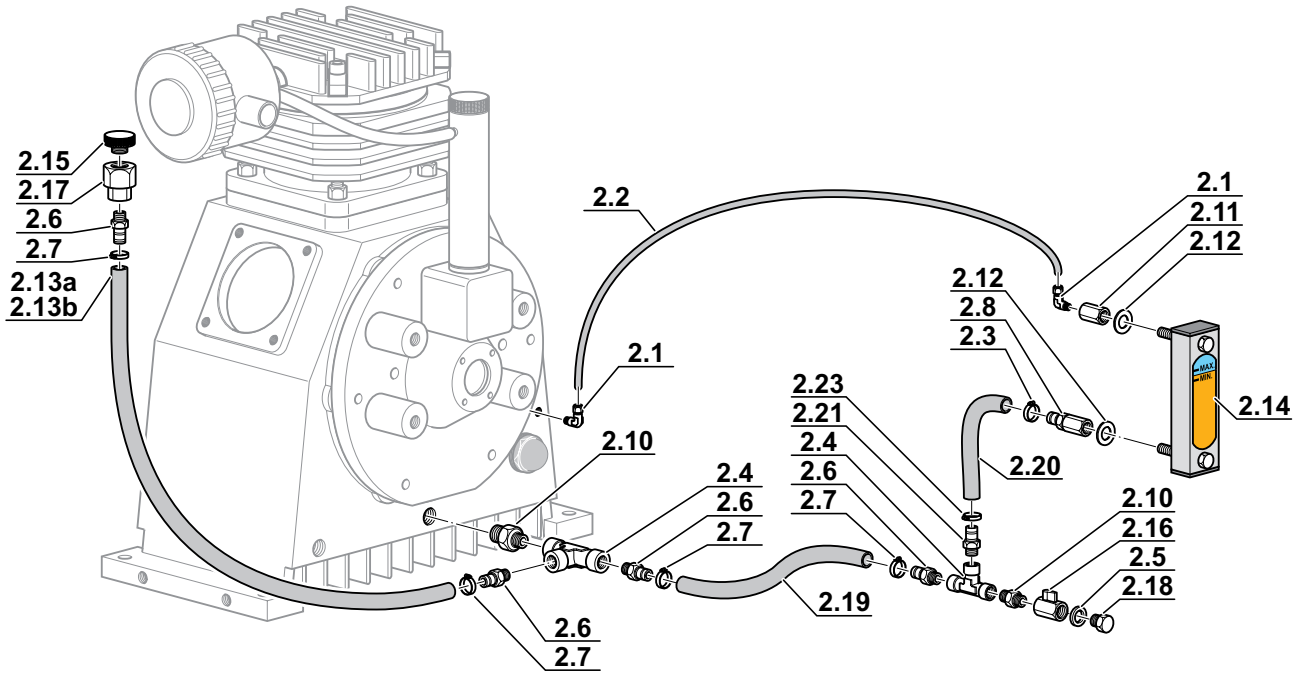

LIVELLO OLIO - OIL LEVEL

Mod: Mark2

Rif. Pos.	Q.tà Q.ty	Codice Code	Descrizione	Description
KIT3	1	LIVELLO/OLIO-TR/R	KIT LIVELLO OLIO PER MCH-13-16 TROPICAL PLUS	KIT OIL LEVE FOR MCH-13-16 TROPICAL PLUS
3.1	1		GIUNTO POMPA OLIO MCH13/16 PER TROPICAL	OIL PUMP COUPLING MCH13/16 TROPICAL
3.2	1		SPINA ELASTICA 3,5X26	PIN 3,5X26
3.3	1		RACCORDO A T 1/2" F	T FITTING 1/2" F
3.4	1		RACCORDO M-M 1/2"	FITTING M-M 1/2"
3.5	1		RUBINETTO SCARICO OLIO MCH13/16	OIL DRAIN VALVE MCH13/16
3.6	1		GUARNIZIONE RAME 21,5X28X1,5	COPPER GASKET 21,5X28X1,5
3.7	1		TAPPO 1/2" SCARICO OLIO	OIL DRAIN PLUG 1/2"
3.8	2		RACCORDO 90° 1/8 NPT	FITTING 90° 1/8 NPT
3.9	1		RACCORDO 90° 1/2F-1/2M	FITTING 90° 1/2F-1/2M
3.10	2		RACCORDO 90° 1/8 - TUBO 6MM	FITTING 90° 1/8 - TUBO 6MM
3.11	1		RACCORDO DIRITTO 1/4 TUBO 8MM	STRAIGHT FITTING 1/4 TUBE 8MM
3.12	1		TUBO INOX 6X1 MCH-13-16 TP SCARICO OLIO	SS TUBE 6X1 MCH-13-16 TP OIL DRAIN
3.13	1		RACCORDO 1/4 G -TUBO 6MM DIRITTO ERMETO	FITTING 1/4 G -PIPE 6MM ERMETO
3.14	1		VITE T.C.E. ZINC. 5X12	SCREW T.C.E. ZINC. 5X12
3.15	1		TAPPO FILTRO OLIO MCH36	MCH-36 OIL FILTER PLUG
3.16	1		MOLLA CONICA DISCO EROGAZIONE RIF. 030	CONICAL SPRING
3.17	1		CARTER FILTRO OLIO MCH36	OIL FILTER CARTER
3.18	1		RACCORDO 2530 1/4 1/8	FITTING 2530 1/4 1/8
3.19	1		POMPA OLIO MCH36	OIL PUMP MCH36
3.20	4		VITE TCEIZN M5X50-8.8 MCH36	TCEIZN M5X50-8.8 MCH36 SCREW
3.21	1		TUBO RILSAN 8X6	RILSAN HOSE 8X6
3.22	1		RACCORDO 1/2 PORTATUBO	1/2 CARRIER FITTING
3.23	2		FASCETTA STRING. 3B D.17/29	CLAMP 3B D.17/29
3.24	1		RIDUZIONE MF CIL. E2151004 1/2 1/4	M-F 1/2 1/4 REDUCTION
3.25	1		TUBO INOX 8X1 MCH-13-16 TP RACC.SCAR. OLIO-POMP	SS TUBE 8X1 MCH-13-16 TP DRAIN FITTING-OIL PUMP
3.26	1		TUBO SCARICO OLIO MCH13/16 COMPACT	OIL DRAIN TUBE MCH13/16 COMPACT
3.27	1		RACCORDO A T FXFXM 1/2	T FITTING FXFXM 1/2
3.28	2		RACCORDO G1/2 M. - PORTAGOMMA	FITTING G1/2 M.
3.29	2		FASCETTA STRING. 2 D10/18	CLAMP 2 D10/18
3.30	1		TUBO LIVELLO OLIO	OIL LEVEL TUBE
3.31	1		RACCORDO INFER. LIVELLO OLIO	LOWER OIL LEVEL FITTING
3.32	2		GUARNIZIONE LIVEL.OLIO 10X20X3	10X20X3 OIL LEVEL GASKET
3.33	1		RACCORDO SUP. LIVELLO OLIO	OIL LEVEL UPPER FITTING
3.34	1		LIVELLO OLIO PER MCH-13-16	OIL LEVEL FOR MCH-13-16
KIT4	1	36-06-006/R	KIT FILTRO OLIO	KIT OIL FILTER
4.1	1		FILTRO OLIO	OIL FILTER
4.2	1		O-RING 3137 NBR 90SH (34.60X2.62)	O-RING 3137 NBR 90SH (34.60X2.62)
4.3	1		GUARNIZIONE FILTRO OLIO IN NBR	OIL FILTER GASKET IN NBR

LIVELLO OLIO - OIL LEVEL

Mod: Mark2

Model: Mark2

KIT3 - LIVELLO/OLIO-TR/R

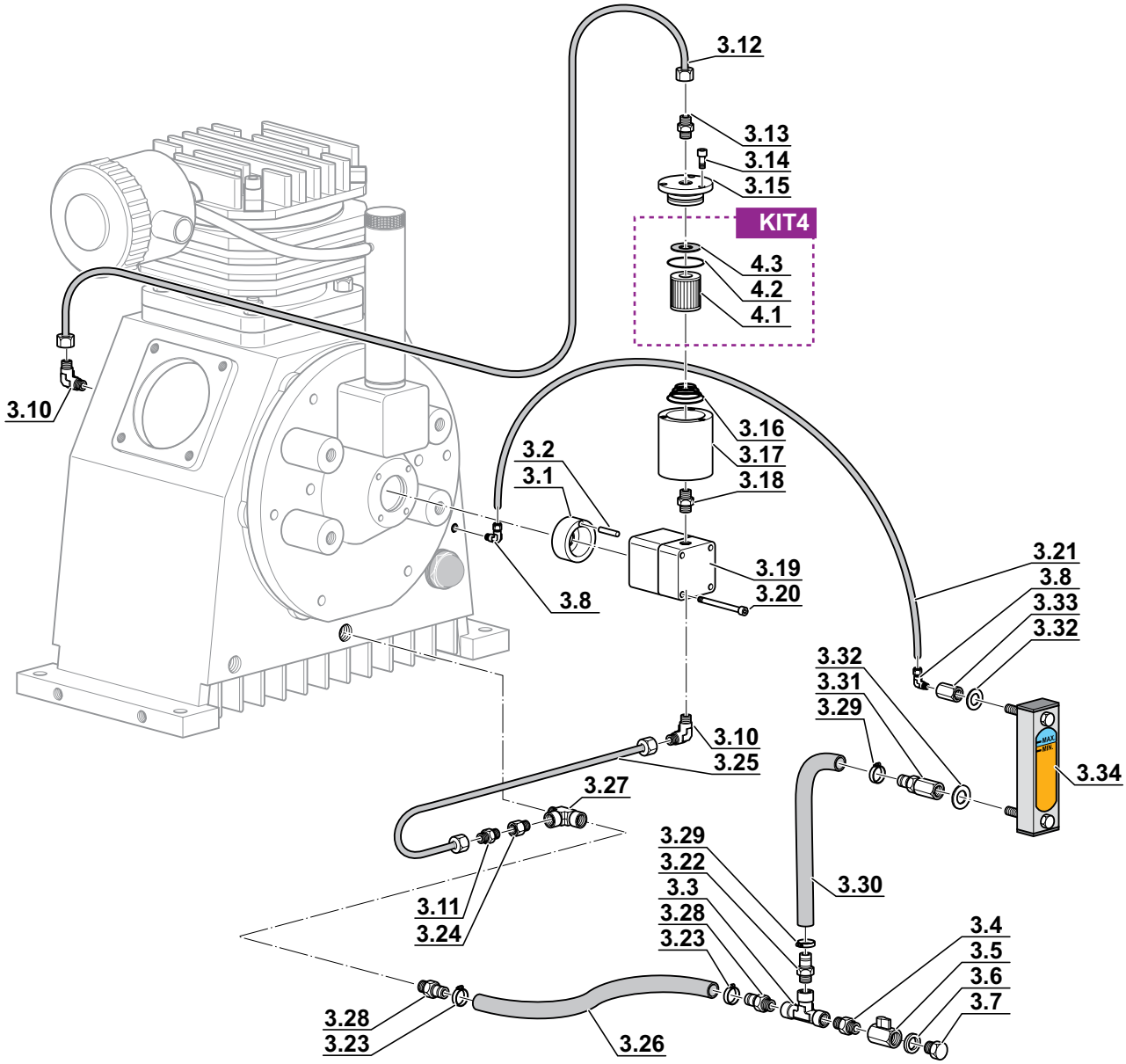

1° STADIO MCH-8 - 1st STAGE MCH-8

Rif. Pos.	Q.tà Q.ty	Codice Code	Descrizione	Description
KIT1	1	HC010300	FILTRO ASPIRAZIONE COMPLETO MCH-8/EOLO330	AIR INTAKE FILTER COMPLETE MCH-8/EOLO330
1.1	1	HC010301	CARTUCCIA FILTRO ASPIRAZIONE MCH-8/EOLO330	CARTRIDGE AIR INTAKE FILTER MCH-8/EOLO330
KIT2	1	08-01-006/R	KIT COPERCHIO TESTA 1° ST. MCH-8	1ST STAGE HEAD COVER MCH-8 KIT
2.1	1		COPERCHIO TESTA 1° ST. MCH5 CNG	1ST STAGE HEAD COVER MCH-5
2.2	1		RACCORDO DIRITTO 1/4 TUBO 10MM	STRAIGHT FITTING 1/4 TUBE 10M.
2.3	4		VITE 6X35 T.C.E. ZINC. DIN 912	SCREW 6X35 T.C.E. ZINC. DIN 912
2.4	4		RONDELLA PIANA ZINC. M6	FLAT WASHER M6
KIT3	1	05-01-05/R	KIT VALVOLA A LAMELLE 1° ST. MCH5 CNG	1ST STAGE REED VALVE MCH-5 KIT
3.1	1		VALVOLA A LAMELLE 1° ST. MCH5 CNG	1ST STAGE REED VALVE MCH-5
3.2	1	05-02-016	GUARNIZIONE GRAFITATA TESTA 1° ST. MCH5 CNG	1ST STAGE GASKET HEAD MCH-5
3.3	1	05-02-015	GUARNIZIONE GRAFITATA CIL. 1° ST. MCH5 CNG	1ST STAGE GASKET CYLINDER MCH-5
KIT4	1	05-01-002/R	KIT CILINDRO 1° ST. MCH5 CNG	1ST STAGE CYLINDER MCH-5 KIT
4.1	1		CILINDRO 1° ST. MCH5 CNG	1ST STAGE CYLINDER MCH-5
4.2	1		O-RING 2275 NBR 90SH (69.57X1.78)	O-RING 2275 NBR 90SH 69,57X1,78
4.3	1		KIT PISTONE 1° STADIO MCH5 DIAM. 60 P6052	1ST STAGE PISTON MCH-5 D.60MM KIT
KIT5	1	05-01-010/R	KIT PISTONE 1° STADIO MCH5 DIAM. 60 P6052	1ST STAGE PISTON MCH-5 D.60MM KIT
5.1	1		PISTONE 1° STADIO MCH5 DIAM. 60 P6052	1ST STAGE PISTON MCH-5 D.60MM
5.2	1		SPINOTTO 1° STADIO MCH5 B 20X13X48	1° STAGE PISTON PIN MCH-5 B20X13X48
5.3	2		SEEGER/ANELLO ELAST.SPIN.PIST.	SEEGER RETAINING RING
5.4	4	05-01-0113	SERIE FASCE ELASTICHE D.60MM 1° ST. MCH-5	N°3 SERIES SEGMENTS 1ST STAGE MCH-5 D.60MM
6	4	13-00-0018	DADO ZINCATO M8 MEDIO	MIDDLE NUT M8 ZINC.
7	4	13-01-0008	TIRANTE PRIMO STADIO MCH13/16	FIRST STAGE TIE ROD MCH13/16
8	4	VITE0820	VITE T.C.E. ZINC. 8X20	T.C.E. ZINC. 8X20 SCREW
9	1	05-01-011	PIASTRA COPERTURA FORO Ø70,5 MCH-5 , BOOSTER	LOCKING PLATE HOLE D.70,5 MCH-5

1° STADIO MCH-8 - 1st STAGE MCH-8

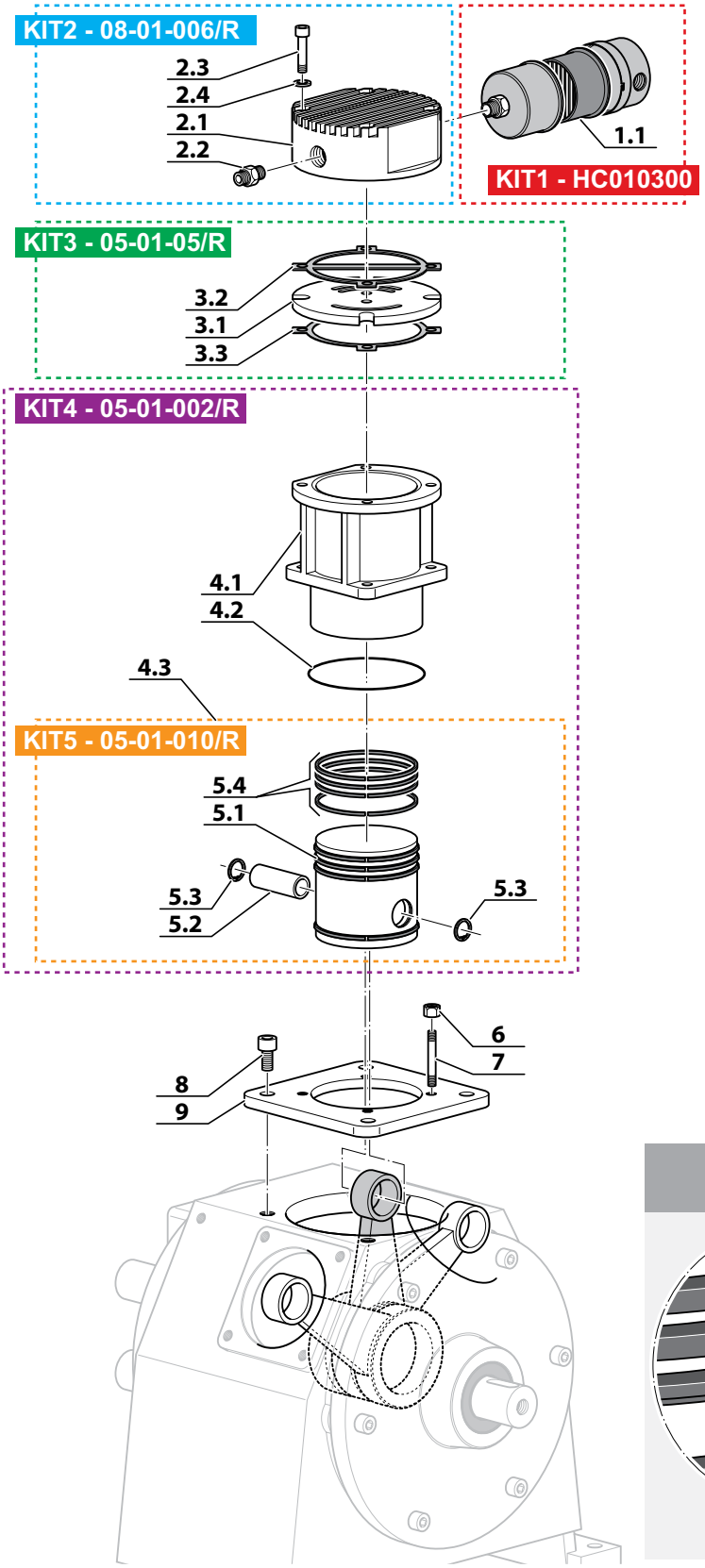

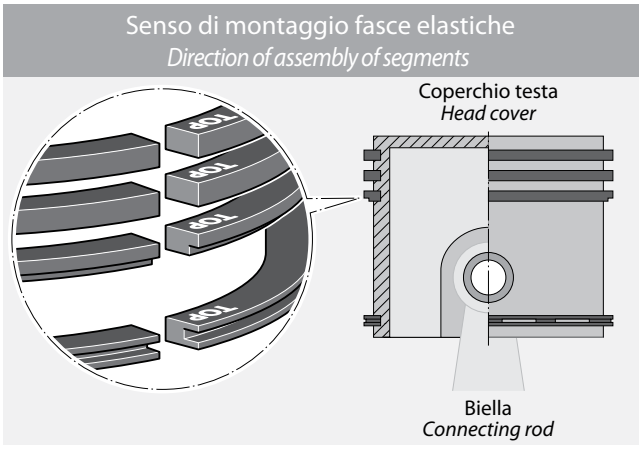

1° STADIO MCH-11-13 - 1st STAGE MCH-11-13

Rif. Pos.	Q.tà Q.ty	Codice Code	Descrizione	Description
KIT1	1	13-01-0006/R	KIT COPERCHIO TESTA 1° STADIO MCH-11-13	1ST STAGE HEAD COVER MCH-11-13 KIT
1.1	1		COPERCHIO TESTA 1° STADIO	1ST STAGE HEAD COVER MCH13/16
1.2	1		RACCORDO DIRITTO 1/4 TUBO 10MM	STRAIGHT FITTING 1/4 TUBE 10M.
1.3	1		O-RING 3137 NBR 90SH (34.60X2.62)	O-R SUCTION FILTER 3137 NBR 90SH (34,60X2,62)
1.4	1		MOLLA FILTRO ASPIRAZIONE	INTAKE FILTER SPRING
1.5	1		O-RING 3281 NBR 90SH COPERC.FILTRO ASPIRAZIONE	INTAKE FILTER COVER O-RING MCH13/16
1.6	1	SC000370	CART. FILTRO ASP. MCH13/16	SUCTION FILTER CARTRIDGE MCH13/16
1.7	1		COPERCHIO FILTRO ASPIRAZIONE	INTAKE FILTER COVER MCH13/16
1.8	4		VITE T.C.E. ZINC. 8X45 DIN912	SCREW T.C.E. ZINC. 8X45 DIN912
1.9	4		RONDELLA PIANA ZINCATA M8	M8 WASHER FLAT ZINC
1.10	1	13-01-0005	GUARNIZ.1° ST.(SAGOM) MCH13/16	1°ST STAGE GASKET MCH/13 UPPER HEAD
KIT2	1	13-01-0003/R	KIT TESTA 1° STADIO 88MM	1°ST STAGE CYLINDER HEAD 88MM KIT
2.1	1	13-01-0005	GUARNIZ.1° ST.(SAGOM) MCH13/16	1°ST STAGE GASKET MCH/13 UPPER HEAD
2.2	1		VALVOLA PRIMO STADIO A LAMELLE MCH13/16	1ST STAGE REED VALVE
2.3	1	16-01-0003	GUARNIZIONE 1° STADIO D.97MM	1ST STAGE 97MM. GASKET UNDER HEAD
KIT3	1	13-01-0002/R	KIT CILINDRO 1^STADIO DIAM 88MM MCH-13	1ST STAGE CYLINDER 88MM. MCH13 KIT
3.1	1		CILINDRO 1^STADIO DIAM 88MM MCH-13	1ST STAGE CYLINDER 88MM. MCH13
3.2	1		O-RING 2400 NBR 90SH(101.34X1.78)	O-RING 2400 NBR 90SH 101,34X1,78
3.3	1		KIT PISTONE 1° MCH-13	1ST STAGE MCH13 KIT
KIT4	1	13-01-0117/R	KIT PISTONE 1° MCH-13	1ST STAGE MCH13 KIT
4.1	1		PISTONE PRIMO STADIO DIAM.88MM	1ST STAGE 88MM. PISTON MCH13
4.2	4	13-01-0118	SERIE FASCE ELASTICHE D.88MM	PISTON RINGS D. 88MM 1STA STAGE MCH13
4.3	1		SPINOTTO PRIMO STADIO D.88MM	FIRST STAGE 88MM PIN
4.4	2		SEEGER/ANELLO ELAST.SPIN.PIST.	SEEGER RETAINING RING

1° STADIO MCH-11-13 - 1st STAGE MCH-11-13

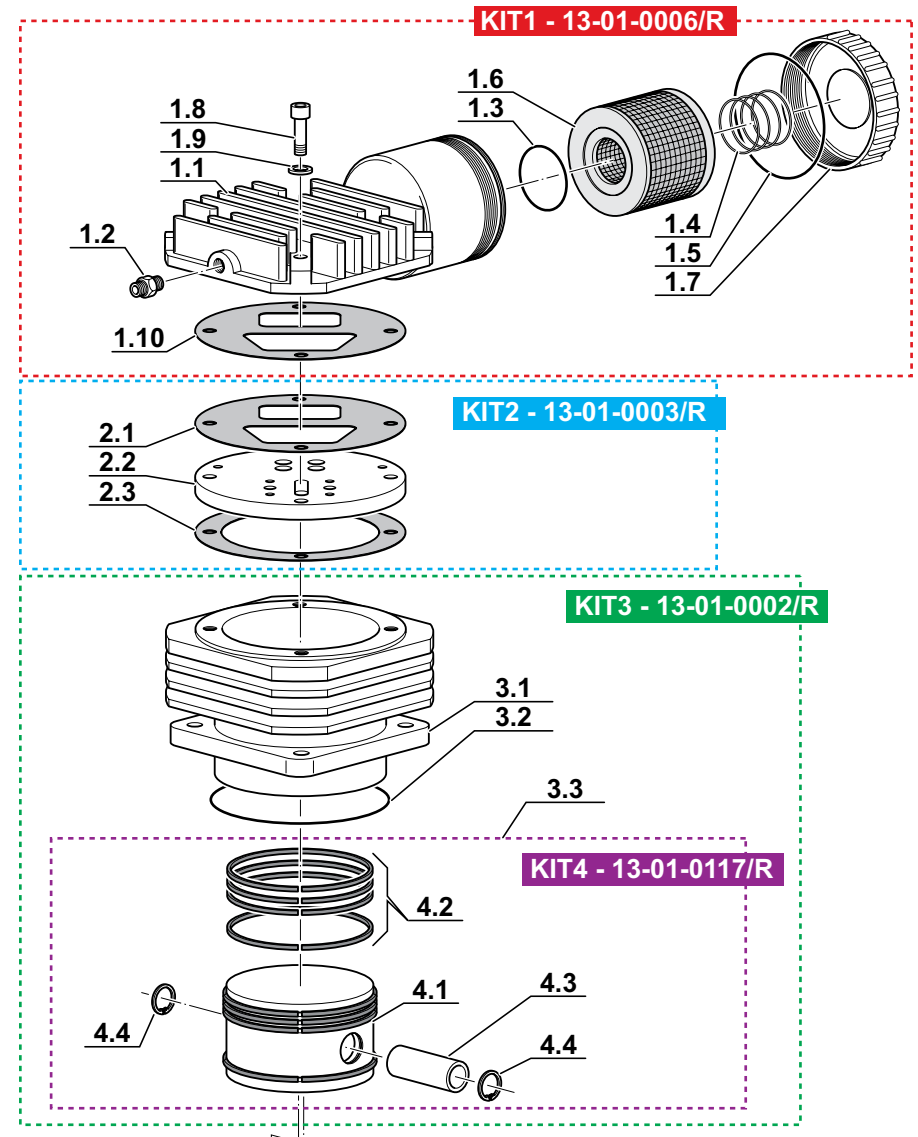

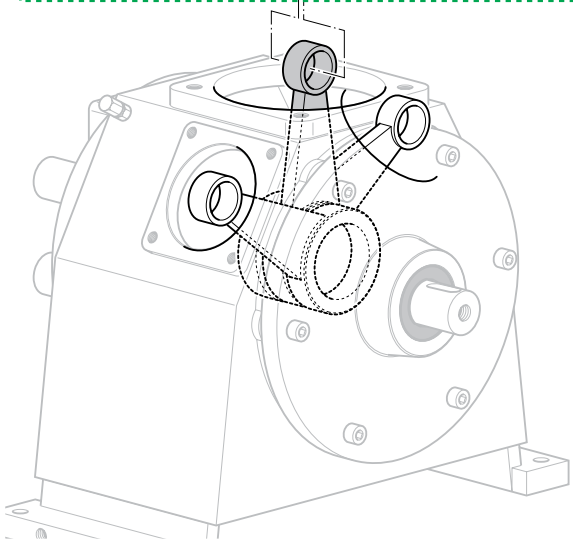

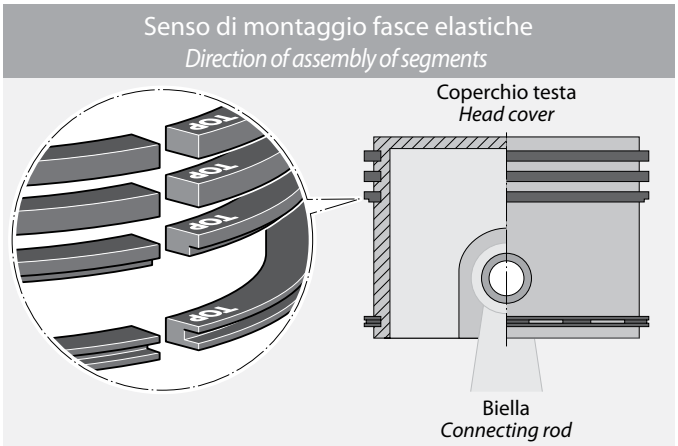

1° STADIO MCH-16-18 - 1st STAGE MCH-16-18

Rif. Pos.	Q.tà Q.ty	Codice Code	Descrizione	Description
KIT1	1	13-01-0006/N/R	KIT COPERCHIO NUOVA TESTA 1° STADIO MCH-16-18	NEW MCH-16-18 1ST STAGE HEAD COVER KIT
1.1	1		COPERCHIO NUOVA TESTA 1° STADIO	NEW 1ST STAGE HEAD COVER MCH13/16
1.2	1		RACCORDO 3/8 TUBO Ø10	FITTING 3/8 TUBE Ø10
1.3	1		O-RING 3137 NBR 90SH (34.60X2.62)	O-R SUCTION FILTER 3137 NBR 90SH (34,60X2,62)
1.4	1		MOLLA FILTRO ASPIRAZIONE	INTAKE FILTER SPRING
1.5	1		O-RING 3281 NBR 90SH COPERC.FILTRO ASPIRAZIONE	INTAKE FILTER COVER O-RING MCH13/16
1.6	1	SC000370	CART. FILTRO ASP. MCH13/16	SUCTION FILTER CARTRIDGE MCH13/16
1.7	1		COPERCHIO FILTRO ASPIRAZIONE	INTAKE FILTER COVER MCH13/16
1.8	4		VITE T.C.E. ZINC. 8X45 DIN912	SCREW T.C.E. ZINC. 8X45 DIN912
1.9	4		RONDELLA PIANA ZINCATA M8	M8 WASHER FLAT ZINC
1.10	1		RONDELLA IN RAME 3/8 (17X23X1,5)	COPPER WASHER 3/8 (17X23X1,5)
1.11	1	13-01-0005/N	GUARNIZ.1° ST.(SAGOM) MCH13/16 NUOVA TESTA	1°ST STAGE GASKET MCH/13 NEW HEAD
KIT2	1	16-01-0003/R	KIT TESTA 1° STADIO 97MM	1°ST STAGE CYLINDER HEAD 97MM KIT
2.1	1	13-01-0005/N	GUARNIZ.1° ST.(SAGOM) MCH13/16 NUOVA TESTA	1°ST STAGE GASKET MCH/13 NEW HEAD
2.2	1		VALVOLA PRIMO STADIO A LAMELLE MCH13/16	1ST STAGE REED VALVE
2.3	1	16-01-0003	GUARNIZIONE 1° STADIO D.97MM	GASKET FIRST STAGE D. 97MM MCH16 UNDER HEAD
KIT3	1	16-01-0002/R	KIT CILINDRO 1^STADIO DIAM. 95MM MCH-16	1ST STAGE CYLINDER D.95MM MCH16 KIT
3.1	1		CILINDRO 1^STADIO DIAM. 95MM MCH-16	1ST STAGE CYLINDER D.95MM MCH16
3.2	1		O-RING 2400 NBR 90SH(101.34X1.78)	O-RING 2400 NBR 90SH 101,34X1,78
3.3	1		KIT PISTONE MCH-16	1ST STAGE MCH16 KIT
KIT4	1	16-01-0117/R	KIT PISTONE MCH-16	1ST STAGE MCH16 KIT
4.1	1	0	PISTONE PRIMO STADIO DIAM.95MM	1ST STAGE PISTON D.95MM MCH16
4.2	4	16-01-0118	SERIE FASCE ELASTICHE D.95MM	PISTON RINGS DIA 95MM FIRST STAGE MCH16
4.3	1		SPINOTTO PRIMO STADIO D.95MM	FIRST STAGE 95MM PIN
4.4	2		SEEGER/ANELLO ELAST.SPIN.PIST.	SEEGER RETAINING RING

1° STADIO MCH-16-18 - 1st STAGE MCH-16-18

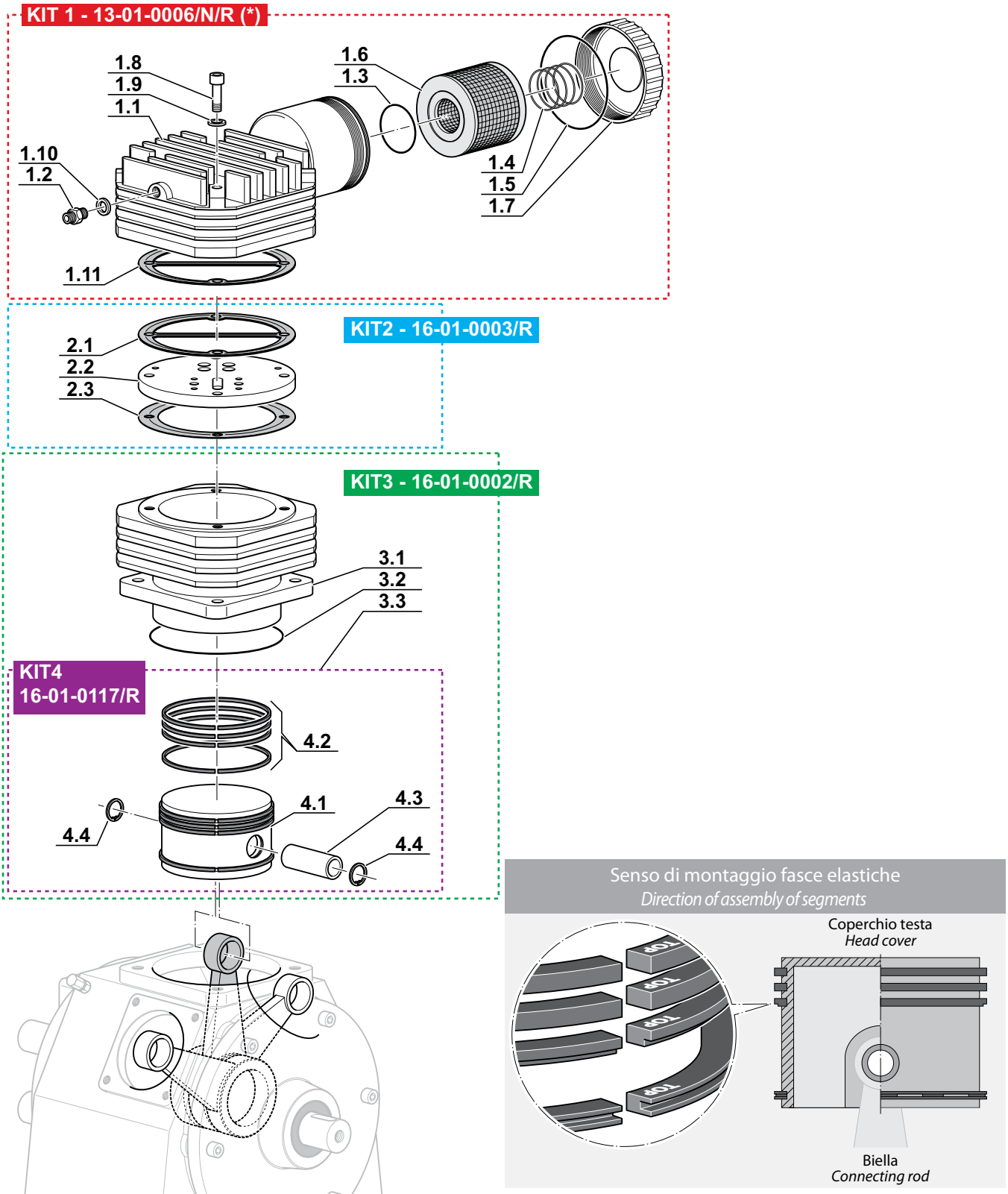

Senso di montaggio fasce elastiche
Direction of assembly of segments

(*) NUOVA TESTA PRIMO STADIO MONTATA SOLO SU COMPRESSORI MCH-16 E MCH-18 A PARTIRE DAL 03-2015
(*) NEW FIRST STAGE HEAD MOUNTED ONLY MCH-16 AND MCH-18 COMPRESSOR FROM 03-2015

2° STADIO MCH-8-11-13 - 2nd STAGE MCH-8-11-13

Rif. Pos.	Q.tà Q.ty	Codice Code	Descrizione	Description
KIT1	1	13-02-0046/R	TESTA 2° STADIO COMPLETA DI VALVOLE E RACCORDI	2ND STAGE HEAD COMPLETE WITH FITTING-ALVE
1.1	2		RACCORDO DIRITTO 1/4 TUBO 10MM	LONG STRAIGHT 1/4 PIPE FITTING10MM.
1.2	1		TESTA 2° STADIO MCH13/16	SECOND STAGE HEAD MCH13/16
1.3	6		VITE T.C.E. ZINC. 8X30	SCREW 8X30 T.C.E. ZINC.
1.4	1	13-00-0205	VALVOLA SICUREZZA 1° STADIO MCH-13-16 10BAR	1ST STAGE SAFETY VALVE MCH-13-16 10BAR
1.5	1	13-02-0044	VALVOLA ASPIRAZIONE 2°STADIO	2ND STAGE SUCTION VALVE ASSBLY
KIT2	1	13-02-0049/R	KIT VALV.SCAR.2° STAD. MCH13/16	2ND STAGE PRESSURE VALVE ASS MCH13/16 KIT
2.1	1		VALV.SCAR.2° STAD. MCH13/16	2ND STAGE PRESSURE VALVE ASS MCH13/16
2.2	1		O-RING 4087 VITON NBR 90 SHORT (21.82X3.53)	O-RING 4087 (21,82X3,53) VITON NBR 90 SHORT
KIT3	1	13-02-0043/R	KIT CILINDRO SECONDO STADIO D.36MM MCH13	2ND STAGE 36MM CYLINDER MCH13 KIT
3.1	1		CILINDRO SECONDO STADIO D.36MM MCH13	2ND STAGE 36MM CYLINDER MCH13
3.2	1		O-RING 3237 NBR 90SH (60.00X2.62)	O-RING 3237 NBR 90SH 60X2,62
3.3	1		CILINDRO GUIDA 2° STAD. D.60MM	2ND STAGE 60MM. GUIDING CYLINDMCH13/16
3.4	1		O-RING 2275 NBR 90SH (69.57X1.78)	O-RING 2275 NBR 90SH 69,57X1,78
3.5	1		KIT PISTONE 2^ STADIO DIAM.60/36MM MCH-13	2ND STAGE PISTON DIA. 60/36MM MCH13 KIT
KIT4	1	13-02-0112/R	KIT PISTONE 2^ STADIO DIAM.60/36MM MCH-13	2ND STAGE PISTON DIA. 60/36MM MCH13 KIT
4.1	1		PISTONE 2^ STADIO DIAM.60/36MM MCH13	2ND STAGE PISTON DIA. 60/36MM MCH13
4.2	4	13-02-0113	SERIE FASCE ELASTICHE D.36MM	PISTON RING DIA. 36MM 2ND STAGE MCH13
4.3	2		SEEGER/ANELLO ELAST.SPIN.PIST.	SEEGER RETAINING RING
4.4	1		SPINOTTO 3° STADIO D.60,36MM	2ND STAGE PIN
4.5	1		PATTINO GUIDA 3^STADIO DIAM.	PUSHING PISTON 60MM. MCH13-16

2° STADIO MCH-8-11-13 - 2nd STAGE MCH-8-11-13

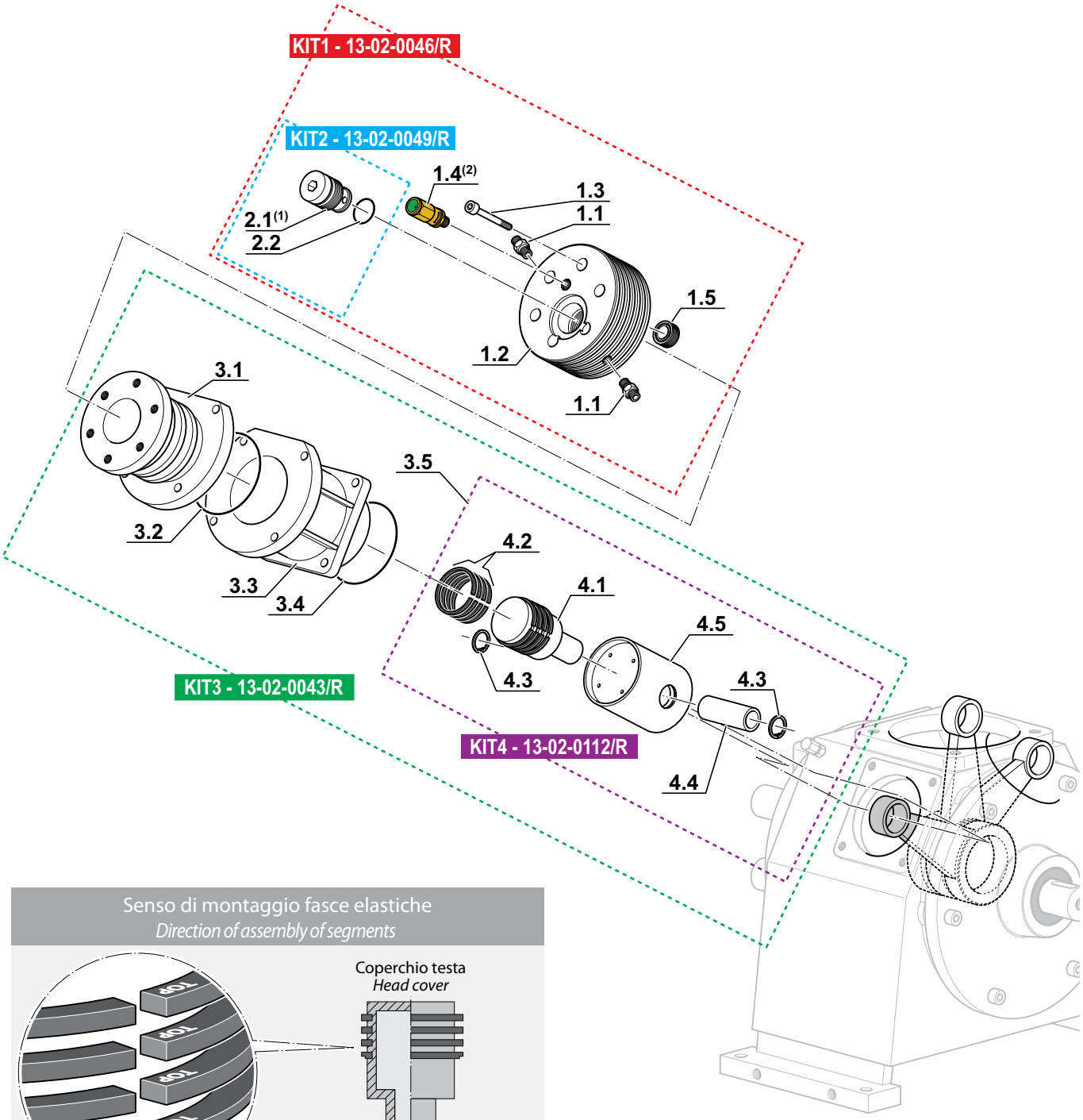

Senso di montaggio fasce elastiche
Direction of assembly of segments

2.1(1) La valvola deve essere stretta con una coppia di serraggio di **65Nm** - The valve must be tightened with a torque of **65Nm**
1.4(2) La valvola deve essere stretta con una coppia di serraggio di **20Nm** - The valve must be tightened with a torque of **20Nm**

2° STADIO MCH-16-18 - 2nd STAGE MCH-16-18

Rif. Pos.	Q.tà Q.ty	Codice Code	Descrizione	Description
KIT1	1	13-02-0046/R	TESTA 2° STADIO COMPLETA DI VALVOLE E RACCORDI	2ND STAGE HEAD COMPLETE WITH FITTING-ALVE
1.1	2		RACCORDO DIRITTO 1/4 TUBO 10MM	LONG STRAIGHT 1/4 PIPE FITTING10MM.
1.2	1		TESTA 2° STADIO MCH13/16	SECOND STAGE HEAD MCH13/16
1.3	6		VITE T.C.E. ZINC. 8X30	SCREW 8X30 T.C.E. ZINC.
1.4	1	13-00-0205	VALVOLA SICUREZZA 1° STADIO MCH-13-16 10BAR	1ST STAGE SAFETY VALVE MCH-13-16 10BAR
1.5	1	13-02-0044	VALVOLA ASPIRAZIONE 2°STADIO	2ND STAGE SUCTION VALVE ASSBLY
KIT2	1	13-02-0049/R	KIT VALV.SCAR.2° STAD. MCH13/16	2ND STAGE PRESSURE VALVE ASS MCH13/16 KIT
2.1	1		VALV.SCAR.2° STAD. MCH13/16	2ND STAGE PRESSURE VALVE ASS MCH13/16
2.2	1		O-RING 4087 VITON NBR 90 SHORT (21.82X3.53)	O-RING 4087 (21,82X3,53) VITON NBR 90 SHORT
KIT3	1	16-02-0043/R	KIT CILINDRO SECONDO STADIO D.38MM MCH16	2ND STAGE CYLINDER D.38MM MCH16 KIT
3.1	1		CILINDRO SECONDO STADIO D.38MM MCH16	2ND STAGE CYLINDER D.38MM MCH16
3.2	1		O-RING 3237 NBR 90SH (60.00X2.62)	O-RING 3237 NBR 90SH 60X2,62
3.3	1		CILINDRO GUIDA 2° STAD. D.60MM	2ND STAGE 60MM. GUIDING CYLINDMCH13/16
3.4	1		O-RING 2275 NBR 90SH (69.57X1.78)	O-RING 2275 NBR 90SH 69,57X1,78
3.5	1		KIT PISTONE 2^ STADIO DIAM.60/38MM MCH16	2ND STAGE PISTON D.60/38MM MCH16 KIT
KIT4	1	16-02-0112/R	KIT PISTONE 2^ STADIO DIAM.60/38MM MCH16	2ND STAGE PISTON D.60/38MM MCH16 KIT
4.1	1		PISTONE 2^ STADIO DIAM.60/38MM MCH16	2ND STAGE PISTON D.60/38MM MCH16
4.2	4	16-02-0113	SERIE FASCE ELASTICHE D.38MM MCH16	2ND STAGE PISTON RINGS D.38MM MCH/16
4.3	2		SEEGER/ANELLO ELAST.SPIN.PIST.	SEEGER RETAINING RING
4.4	1		SPINOTTO 3° STADIO D.60,36MM	2ND STAGE PIN
4.5	1		PATTINO GUIDA 3^STADIO DIAM.	PUSHING PISTON 60MM. MCH13-16

2° STADIO MCH-16-18 - 2nd STAGE MCH-16-18

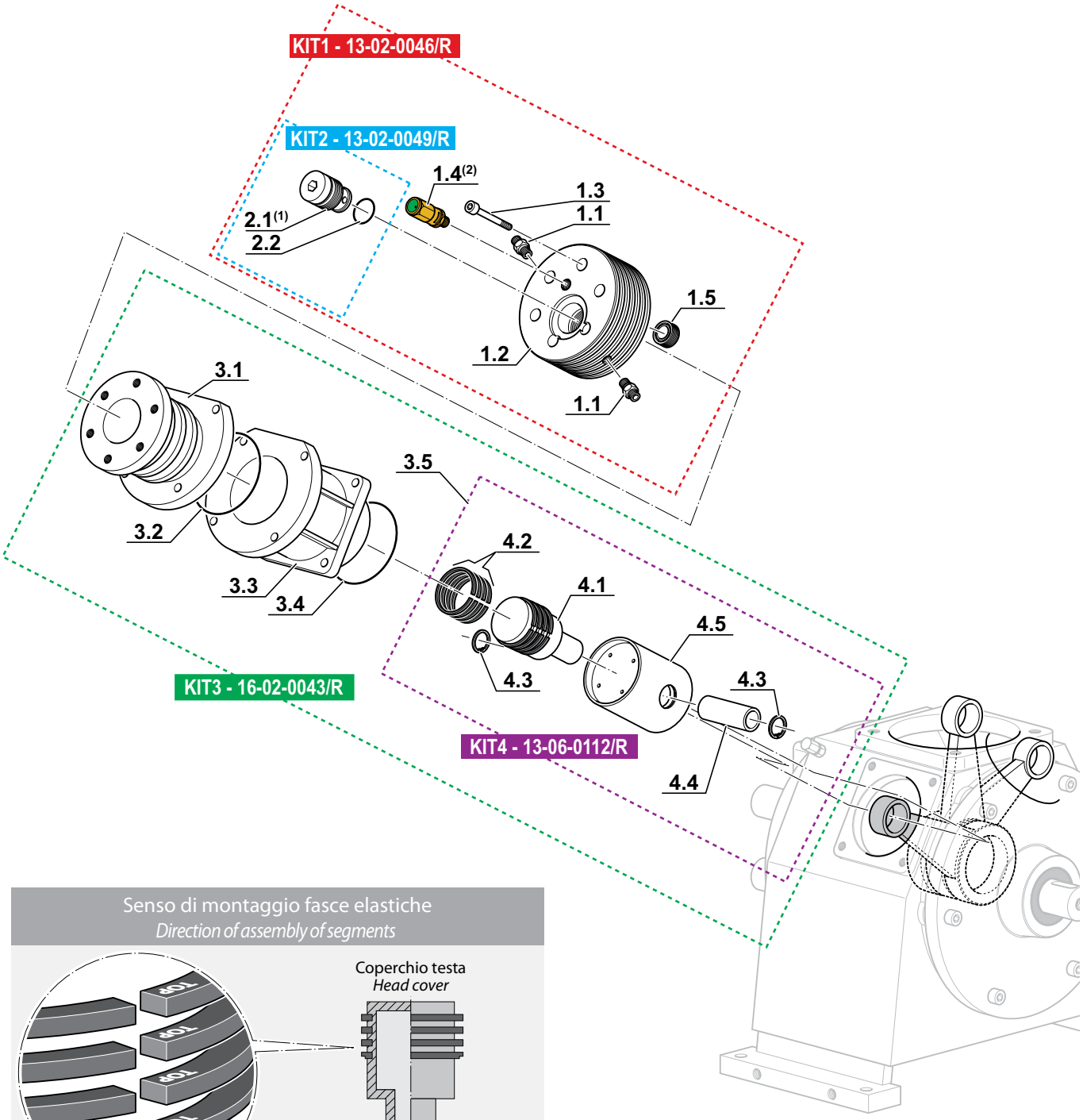

Senso di montaggio fasce elastiche
Direction of assembly of segments

2.1(1) La valvola deve essere stretta con una coppia di serraggio di **65Nm** - The valve must be tightened with a torque of **65Nm**
1.4(2) La valvola deve essere stretta con una coppia di serraggio di **20Nm** - The valve must be tightened with a torque of **20Nm**

3° STADIO G3 - 3rd STAGE G3
Per modelli dal 03-2014 - For models by 03-2014

Rif. Pos.	Q.tà Q.ty	Codice Code	Descrizione	Description
KIT1	1	13-03-0022-2/R	KIT TESTA NUOVA 3° STADIO MCH-13-16	3RD STAGE NEW HEAD MCH-13-16
1.1	1		PERNO GUIDA VALV. SC. 3°ST MCH-13-16 M16X1,5	SPINDLE SPRING VALVE 3RD STAGE
1.2	1		O-RING 2062 VITON NBR 90 SHORT(15.60X1.78)	O-RING VITON NBR 90 SHORT
1.3	1		MOLLA INOX Ø11X8,6 L. 18,5 FILO 1,2 4° ST. MCH-36	INOX SPRING Ø11X8,6 L. 18,5 WIRE 1,2 4° ST. MCH-36
1.4	6		VITE T.C.E. ZINC. 8X45 DIN912	SCREW T.C.E. ZINC. 8X45 DIN912
1.5	1		TESTA NUOVA 3° STADIO MCH-13-16	KIT 3RD STAGE NEW HEAD MCH-13-16
1.6	1		RACC. 1/4 G TUBO 8 MM	1/4 G TUBE 8MM FITTING
1.7	3		RONDELLA 1/4 IN RAME	COPPER WASHER 1/4
1.8	1		RACCORDO 1/4 G -TUBO 6MM DIRITTO ERMETO	FITTING 1/4 G -PIPE 6MM ERMETO
1.9	1		O-RING 2100 VITON NBR 90SH(25.12X1.78)	O-RING 2100 (25,12X1,78) VITON NBR 90SH
1.10	1		PIATTELLO A STELLA VALV. SCARICO 3°ST MCH-13-16	STAR PLATE EXHAUST VALVE 3RD STAGE MCH-13-16
1.11	1		CORPO VALVOLA Ø15 3° STADIO MCH-13-16	BODY VALVE 3RD STAGE MCH-13-16
1.12	1		DISCO VALVOLA ASPIRAZIONE MCH36 (24X15,2X1)	DISC VALVE SUCTION MCH36 (24X15,2X1)
1.13	1		MOLLA 24X15,2 H.0,2 4° ST. MCH-36	SPRING 24X15,2 H.0,2 4° ST. MCH-36
KIT2	1	13-03-0122/R	KIT PISTONE 3° STADIO MCH13/16	PISTON 3RD ST.GE 14 MCH13/16 KIT
2.1	5		SEGMENTI 3^ STADIO Ø14 COD. 0001400000 S0	3°RD STAGE SEGMENTS Ø14 COD. 0001400000 S0
2.2	1		PISTONE 3° STADIO Ø14MM CON PIOLO ACC. AVP	PISTON 3RD ST.GE Ø14MM WITH PEG ACC. AVP
2.3	1		O-RING 2100 VITON NBR 90SH(25.12X1.78)	O-RING 2100 (25,12X1,78) VITON NBR 90SH
2.4	1		CIL. 3° STADIO Ø14MM MCH-13-16 VALV. ASP.	3RD STAGE CYL. Ø14MM MCH13/16 SUCTION VALVE
KIT3	1	13-03-0027/1/R	KIT SOSTITUZIONE NUOVA TESTA	NEW HEAD UPGRADE KIT
3.1	1	13-03-0022-2/R	KIT TESTA NUOVA 3° STADIO MCH-13-16	3RD STAGE NEW HEAD MCH-13-16
3.2	1	13-03-0122/R	KIT PISTONE 3° STADIO MCH13/16	PISTON 3RD ST.GE 14 MCH13/16 KIT
KIT4	1	13-02-0017/R	KIT CILINDRO GUIDA TERZO STADIO	KIT 3RD STAGE GUIDING CYLINDER MCH13/16
4.1	1		PATTINO GUIDA 3^STADIO DIAM.	PUSHING PISTON 60MM. MCH13-16
4.2	1		SPINOTTO 3° STADIO D.60,36MM	2ND STAGE PIN
4.3	2		SEEGER/ANELLO ELAST.SPIN.PIST.	SEEGER RETAINING RING
4.4	1		RACCORDO 90° 1/8 NPT	FITTING 90° 1/8 NPT
4.5	1		TUBO VISUALIZZAZIONE LUBRIFIC.	OIL LEVEL INDICATOR
4.6	1		RACC.DIAM. 8 1/8 PER TUBO RILS	CONNECTION .DIAM. 8 1/8 FOR RILS TUBE
4.7	1		CILINDRO INFER. PATTINO GUIDA 60MM 3°ST	LOWER 3RD STAGE 60MM. GUIDING CYLINDER
4.8	1		O-RING 2275 NBR90SH (69.57X1.78)	O-RING 2275 NBR 90SH 69,57X1,78
4.9	1		CILINDRO GUIDA TERZO STADIO	3RD STAGE GUIDING CYLINDER MCH13/16
4.10	1		O-RING 3237 NBR90SH (60.00X2.62)	O-RING 3237 NBR 90SH 60X2,62
KIT5	1	13-03-0022/15/R	KIT VALVOLA NUOVA TESTA 3°STADIO	SERVICE KIT 3RD STAGE VALVES G3
5.1	1		O-RING 2062 VITON NBR 90 SHORT(15.60X1.78)	O-RING VITON NBR 90 SHORT
5.2	1		MOLLA INOX Ø11X8,6 L. 18,5 FILO 1,2 4° ST. MCH-36	INOX SPRING Ø11X8,6 L. 18,5 WIRE 1,2 4° ST. MCH-36
5.3	1		RONDELLA 1/4 IN RAME	COPPER WASHER 1/4
5.4	1		PIATTELLO A STELLA VALV. SCARICO 3°ST MCH-13-16	STAR PLATE EXHAUST VALVE 3RD STAGE MCH-13-16
5.5	1		CORPO VALVOLA Ø15 3° STADIO MCH-13-16	BODY VALVE 3RD STAGE MCH-13-16
5.6	1		O-RING 2100 VITON NBR 90SH(25.12X1.78)	O-RING 2100 (25,12X1,78) VITON NBR 90SH
5.7	1		DISCO VALVOLA ASPIRAZIONE MCH36 (24X15,2X1)	DISC VALVE SUCTION MCH36 (24X15,2X1)
5.8	1		MOLLA 24X15,2 H.0,2 4° ST. MCH-36	SPRING 24X15,2 H.0,2 4° ST. MCH-36
5.9	1		O-RING 2100 VITON NBR 90SH(25.12X1.78)	O-RING 2100 (25,12X1,78) VITON NBR 90SH
5.10	1		PERNO GUIDA VALV. SC. 3°ST MCH-13-16 M16X1,5	SPINDLE SPRING VALVE 3RD STAGE

3° STADIO G3 - 3rd STAGE G3
Per modelli dal 03-2014 - For models by 03-2014

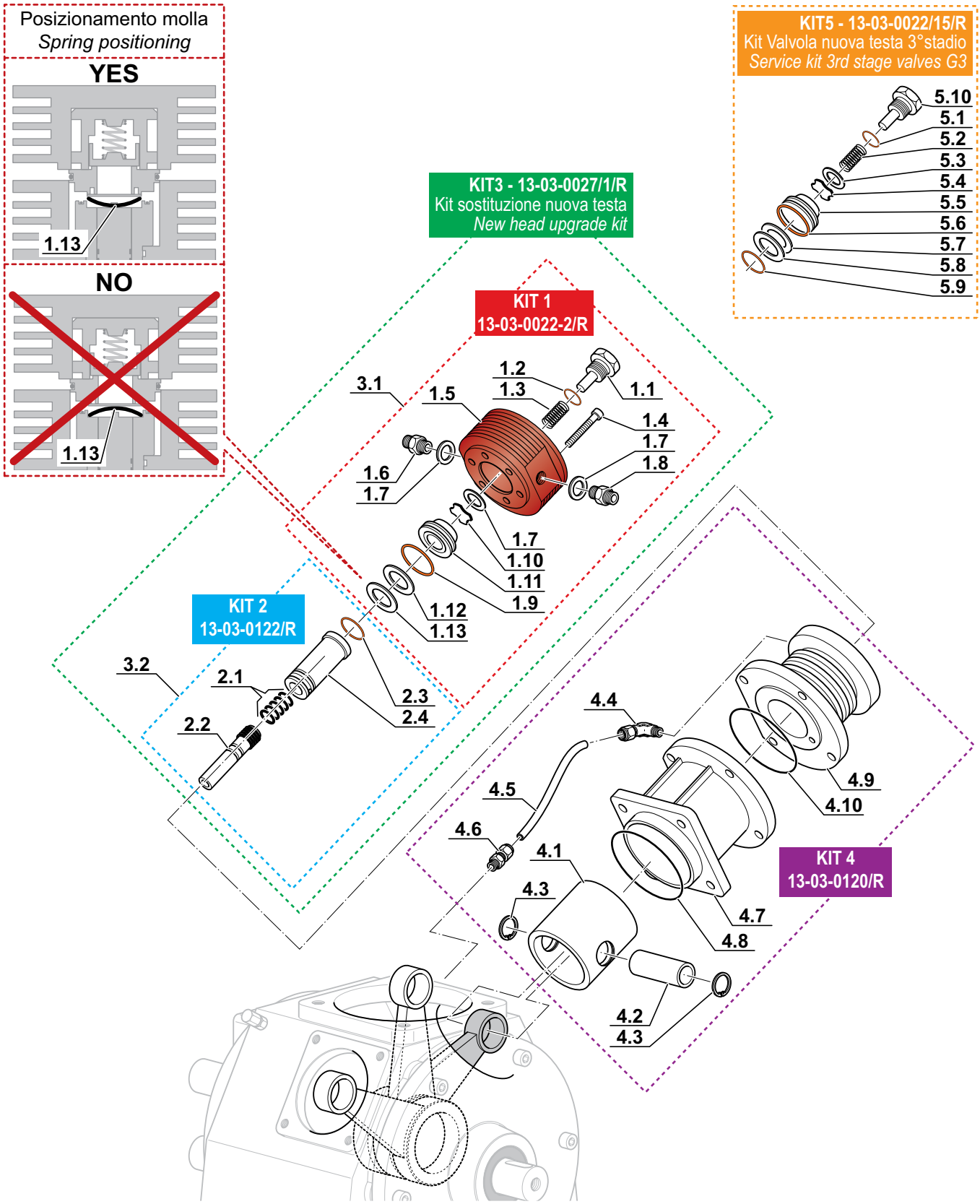

3° STADIO G2 - 3rd STAGE G2
Per modelli fino al 03-2014 - For models up to 03-2014

Rif. Pos.	Q.tà Q.ty	Codice Code	Descrizione	Description
KIT1	1	13-03-0027/R	KIT TESTA 3° STADIO MCH13/16	3RD ST.GE HEAD FOR MCH13/16 KIT
1.1	1	13-03-0028	VALV.SCAR.3° STAD.MCH13/16	3RD STAGE PRESSURE VALVE ASS MCH13/16
1.2	1		O-RING 2062 VITON NBR 90 SHORT(15.60X1.78)	O-RING VITON NBR 90 SHORT
1.3	1		TESTA 3° STADIO MCH13/16	3RD ST.GE HEAD FOR MCH13/16
1.4	2		RACCORDO 1/4 G -TUBO 6MM DIRITTO ERMETO	FITTING 1/4 G -PIPE 6MM ERMETO
1.5	2		RONDELLA 1/4 IN RAME	COPPER WASHER 1/4
1.6	1	13-03-0020	VALV. ASPIRAZ.3° STAD.MCH13/16	3RD SUCTION VALVE ASSBLY MCH13/16
1.7	1		RACC. 1/4 G TUBO 8 MM	1/4 G TUBE 8MM FITTING
1.8	1		COPERCHIO TESTA 3° ST.MCH13/16	3RD STAGE HEAD COVER
1.9	1		DADO INOX CIECO M8 DIN 1587	STAINLESS STEEL 8MM CAP NUT
1.10	1		RONDELLA RAME M8 (8X14X1,5)	8MM COPPER WASHER MCH13/16
1.11	1		GRANO INOX P. 'A' 8X25	8X25 STAINLESS STEEL DOWEL
1.12	6		VITE 8X55 T.C.E. ZINC.	SCREW 8X55 T.C.E. ZINC.
KIT2	1	13-03-0126/R	KIT PISTONE 3° STADIO MCH13/16	PISTON 3RD ST.GE 14 MCH13/16 KIT
2.1	5		SEGMENTI 3^ STADIO Ø14 COD. 0001400000 S0	3°RD STAGE SEGMENTS Ø14 COD. 0001400000 S0
2.2	1		PISTONE 3° STADIO D.14MM	PISTON 3RD ST.GE 14 DIA MM
2.3	1		O-RING 2100 VITON NBR 90 SHORT(25.12X1.78)	O-RING 2100 (25,12X1,78) VITON NBR 90 SHORT
2.4	1		CILINDRO 3° STADIO D.14MM	3RD STAGE CYLINDER DIA 14MM MCH13/16
KIT3	1	13-02-0017/R	KIT CILINDRO GUIDA TERZO STADIO	KIT 3RD STAGE GUIDING CYLINDER MCH13/16
3.1	1		PATTINO GUIDA 3^STADIO DIAM.	PUSHING PISTON 60MM. MCH13-16
3.2	1		SPINOTTO 3° STADIO D.60,36MM	2ND STAGE PIN
3.3	2		SEEGER/ANELLO ELAST.SPIN.PIST.	SEEGER RETAINING RING
3.4	1		RACCORDO 90° 1/8 NPT	FITTING 90° 1/8 NPT
3.5	1		TUBO VISUALIZZAZIONE LUBRIFIC.	OIL LEVEL INDICATOR
3.6	1		RACC.DIAM. 8 1/8 PER TUBO RILS	CONNECTION .DIAM. 8 1/8 FOR RILS TUBE
3.7	1		CILINDRO INFER. PATTINO GUIDA 60MM 3°ST	LOWER 3RD STAGE 60MM. GUIDING CYLINDER
3.8	1		O-RING 2275 NBR90SH (69.57X1.78)	O-RING 2275 NBR 90SH 69,57X1,78
3.9	1		CILINDRO GUIDA TERZO STADIO	3RD STAGE GUIDING CYLINDER MCH13/16
3.10	1		O-RING 3237 NBR90SH (60.00X2.62)	O-RING 3237 NBR 90SH 60X2,62

3° STADIO G2 - 3rd STAGE G2
Per modelli fino al 03-2014 - For models up to 03-2014

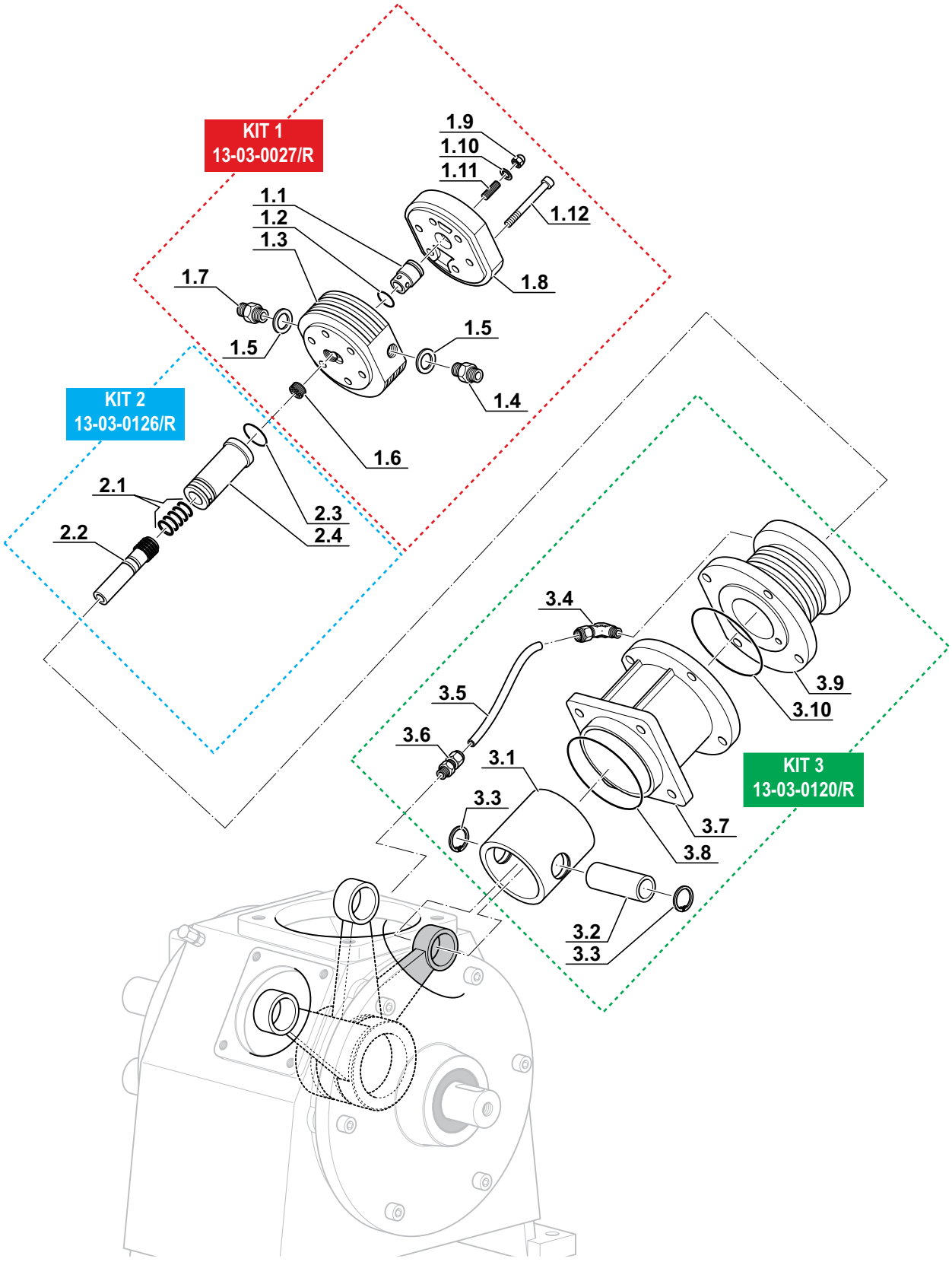

CIRCUITO DI PRESSIONE - PRESSURE CIRCUIT

Rif. Pos.	Q.tà Q.ty	Codice Code	Descrizione	Description
KIT1	1	13-00-0085/R	KIT TUBO RAFFREDDAMENTO 10MM 1°-2°ST.	1ST-2ND STAGE 10MM COOLING PIPE KIT
1.1	1		TUBO RAFFRED.10MM 1°-2°ST.	1ST-2ND STAGE 10MM COOLING PIPE
1.2	2		STAFFA PORTATUBO ZINC. 45X15MMMCH13/16	PIPE HOLDING BRACKET 45X15MMMCH13/16
1.3	2		DADO ZINCATO AUTOBLOC. M6 ALTO	SELF LOCKING NUT M6 HIGH
1.4	2		VITE T.C.E. ZINC. 6X20 DIN912	SCREW T.C.E. ZINC. 6X20 DIN912
1.5	2		VITE 6X35 T.C.E. ZINC. DIN 912	SCREW 6X35 T.C.E. ZINC. DIN 912
1.6	4		SEMISTAFFA FERMATUBO D.10 2 FORI 8 SEDI	2 HOLE PIPE-HOLDING BRACKET
1.7	4		SEMISTAFFA FERMATUBO D.10 3 FORI 7 SEDI	3 HOLE PIPE-HOLDING BRACKET
KIT2	1	13-00-0089/R	KIT TUBO RAFFREDDAMENTO 10MM 2°-3°ST.	2ND-1ST STAGE 10MM COOLING PIPE KIT
2.1	1		TUBO RAFFR.10MM 2°/3°ST. (F)	2ND-3RD STAGE 10MM COOLING PIPE KIT
2.2	2		STAFFA PORTATUBO ZINC. 75X15MM	PIPE HOLDING BRACKET 75X15MM. MCH13/16
2.3	2		DADO ZINCATO AUTOBLOC. M6 ALTO	SELF LOCKING NUT M6 HIGH
2.4	2		VITE T.C.E. ZINC. 6X20 DIN912	SCREW T.C.E. ZINC. 6X20 DIN912
2.5	2		VITE 6X35 T.C.E. ZINC. DIN 912	SCREW 6X35 T.C.E. ZINC. DIN 912
2.6	4		SEMISTAFFA FERMATUBO D.10 2 FORI 8 SEDI	2 HOLE PIPE-HOLDING BRACKET
2.7	4		SEMISTAFFA FERMATUBO D.10 3 FORI 7 SEDI	3 HOLE PIPE-HOLDING BRACKET
KIT3	1	13-03-0023/N/R	KIT TUBO RAFFREDAMENTO 6MM 3°-SEPARATORE	3RD-SEPARATOR 6MM COOLING PIPE KIT
3.1	1		TUBO RAFFREDAM.TO DIAM. 6 (C)	6MM COOLING PIPE 3RD-SEPARATOR
3.2	2		STAFFA PORTATUBO 6 MM	TUBE CLAMP 6 MM SEPARATOR-4TH STAGE
3.3	2		VITE T.C.E. ZINCATA 8X30	SCREW T.C.E. ZINCATA 8X30
3.4	2		STAFFA SINGOLA PORTATUBO 3MM	SINGLE 6MM. PIPE-HOLDING BRACKET MCH13/16
3.5	2		GOMM ANTIVIBR 2 FORI TUBO DA 6	ANTI VIBRATION BLOCK TUBE6 2 HOLE
3.6	8		ANTIVIBRANTE 7 FORI Ø6 PORTATUBO – 4 PEZZI	ANTI VIBRATION BLOCK TUBE6 7 HOLE - 4 PIECES
3.7	2		STAFFA DOPPIA PORTATUBO 6MM	DOUBLE 6MM. PIPE-HOLDING BRACKET MCH13/16
4	1	13-00-0036/P	TUBO 8MM COLLEG.SEP/3° ST.(D)	TUBE 8MM. 3RD STAGE/SEPARATOR(D) MCH13/16
5	1	13-00-0175E	RACC. 1/4 G TUBO 8 MM	1/4 G TUBE 8MM FITTING
6	1	GUAR1319	RONDELLA 1/4 IN RAME	COPPER WASHER 1/4
7	1	13-00-0026E	RACCORDO 1/4 G -TUBO 10MM DIRITTO ERMETO	STRAIGHT FITTING 1/4 G -TUBO 10MM ERMETO
8	1	13-00-0174E	RACC. 1/8 NPT TUBO 6 MM	STRAIGHT 1/8 PIPE FITTING 6

CIRCUITO DI PRESSIONE - PRESSURE CIRCUIT

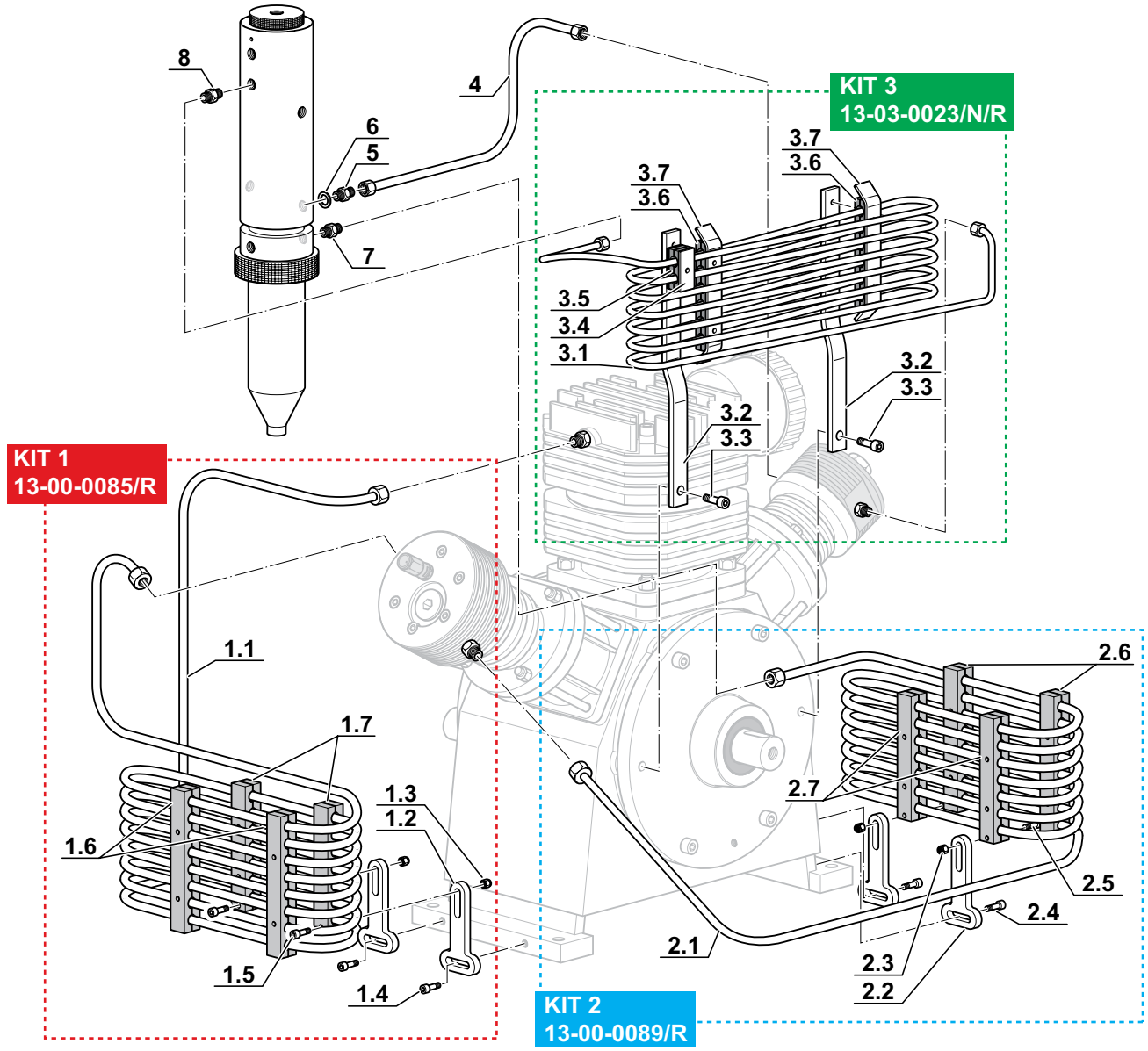

CIRCUITO DI PRESSIONE - PRESSURE CIRCUIT

Mod: Tropical - Tropical Plus

Rif. Pos.	Q.tà Q.ty	Codice Code	Descrizione	Description
KIT1	1	13-01-0085/TR/R	KIT TUBO RAFFR. 1°-SEP. 12MM MCH13/16 TR-TRPL	COOLING PIPE 12MM 1ST-SEP. MCH13/16 TR-TRPL KIT
1.1	1		TUBO RAFFR. MCH13 T/TP Ø12 (C)	COOLING PIPE 12MM 1ST-SEPARATOR MCH13/16 T-TP
1.2	2		STAFFA FERMATUBO D. 12 DUE VIE X TROPICAL	2 HOLE PIPE-HOLDING BRACKET
1.3	4		SEMISTAFFA FERMATUBO D.12 3 FORI 7 SEDI	3 HOLE PIPE-HOLDING BRACKET
1.4	2		SEMISTAFFA FERMATUBO D.12 2 FORI 8 SEDI	2 HOLE PIPE-HOLDING BRACKET
1.5	2		DADO ZINCATO AUTOBLOC. M6 ALTO	SELF LOCKING NUT M6 HIGH
1.6	2		VITE 6X35 T.C.E. ZINC. DIN 912	SCREW 6X35 T.C.E. ZINC. DIN 912
1.7	2		STAFFA PORTATUBO ZINC. 45X15MMMCH13/16	PIPE HOLDING BRACKET 45X15MMMCH13/16
1.8	4		VITE T.C.E. ZINC. 6X20 DIN912	SCREW T.C.E. ZINC. 6X20 DIN912
KIT2	1	13-00-0089/TR/R	KIT TUBO RAFFR. 2°-SEP. 12MM MCH13/16 TR-TRPL	COOLING PIPE 12MM 2ND-SEP. MCH13/16 TR-TRPL KIT
2.1	1		TUBO RAFFR.12MM MCH13/16 TRL/TRPL(D)	COOLING PIPE 12MM 2ND-SEP. MCH13/16 TR-TR.PL
2.2	4		SEMISTAFFA FERMATUBO D.12 3 FORI 7 SEDI	3 HOLE PIPE-HOLDING BRACKET
2.3	2		SEMISTAFFA FERMATUBO D.12 2 FORI 8 SEDI	2 HOLE PIPE-HOLDING BRACKET
2.4	2		STAFFA PORTATUBO ZINC. 75X15MM	PIPE HOLDING BRACKET 75X15MM. MCH13/16
2.5	2		DADO ZINCATO AUTOBLOC. M6 ALTO	SELF LOCKING NUT M6 HIGH
2.6	2		VITE 6X35 T.C.E. ZINC. DIN 912	SCREW 6X35 T.C.E. ZINC. DIN 912
2.7	2		VITE T.C.E. ZINC. 6X20 DIN912	SCREW T.C.E. ZINC. 6X20 DIN912
KIT3	1	13-03-0023/N/R	KIT TUBO RAFFREDAMENTO 6MM 3°-SEPARATORE	3RD-SEPARATOR 6MM COOLING PIPE KIT
3.1	1		TUBO RAFFREDAM.TO DIAM. 6 (C)	6MM COOLING PIPE 3RD-SEPARATOR
3.2	2		STAFFA PORTATUBO 6 MM	TUBE CLAMP 6 MM SEPARATOR-4TH STAGE
3.3	2		VITE T.C.E. ZINCATA 8X30	SCREW T.C.E. ZINCATA 8X30
3.4	2		STAFFA SINGOLA PORTATUBO 3MM	SINGLE 6MM. PIPE-HOLDING BRACKET MCH13/16
3.5	2		GOMM ANTIVIBR 2 FORI TUBO DA 6	ANTI VIBRATION BLOCK TUBE6 2 HOLE
3.6	8		GOMM. ANTIVIBR. PORTATUB 3 FOR	ANTI VIBRATION BLOCK TUBE6 3 HOLE
3.7	2		STAFFA DOPPIA PORTATUBO 6MM	DOUBLE 6MM. PIPE-HOLDING BRACKET MCH13/16
4	1	13-00-0036/N/P	TUBO 8MM COLLEG.SEP/3° ST.(D)	TUBE 8MM SEP/3° ST.(D)
5	1	13-00-0175E	RACC. 1/4 G TUBO 8 MM	1/4 G TUBE 8MM FITTING
6	1	GUAR1319	RONDELLA 1/4 IN RAME	COPPER WASHER 1/4
7	1	13-02-0086/TR/P	TUBO RAFFR. Ø12 MCH13/16 T/TP (B)	COOLING PIPE 12MM SEP.-2ND MCH13/16 T-TP
8	1	RACCE212112LG1/2	RACC. E212-112L G1/2" CON GUARNIZIONE LARGA	FITTING E212-112L G1/2" WITH GASKET
9	1	RACC/E212112L38	RACCORDO E212-112L G3/8"	FITTING E212-112L G3/8"
10	1	13-00-0174E	RACC. 1/8 NPT TUBO 6 MM	STRAIGHT 1/8 PIPE FITTING 6
11	1	13-02-0048E	RACCORDO G 1/4 - M18X1,5 TUBO Ø12	FITTING 1/4 - M18X1,5 TUBE Ø12

CIRCUITO DI PRESSIONE - PRESSURE CIRCUIT

Mod: Tropical - Tropical Plus

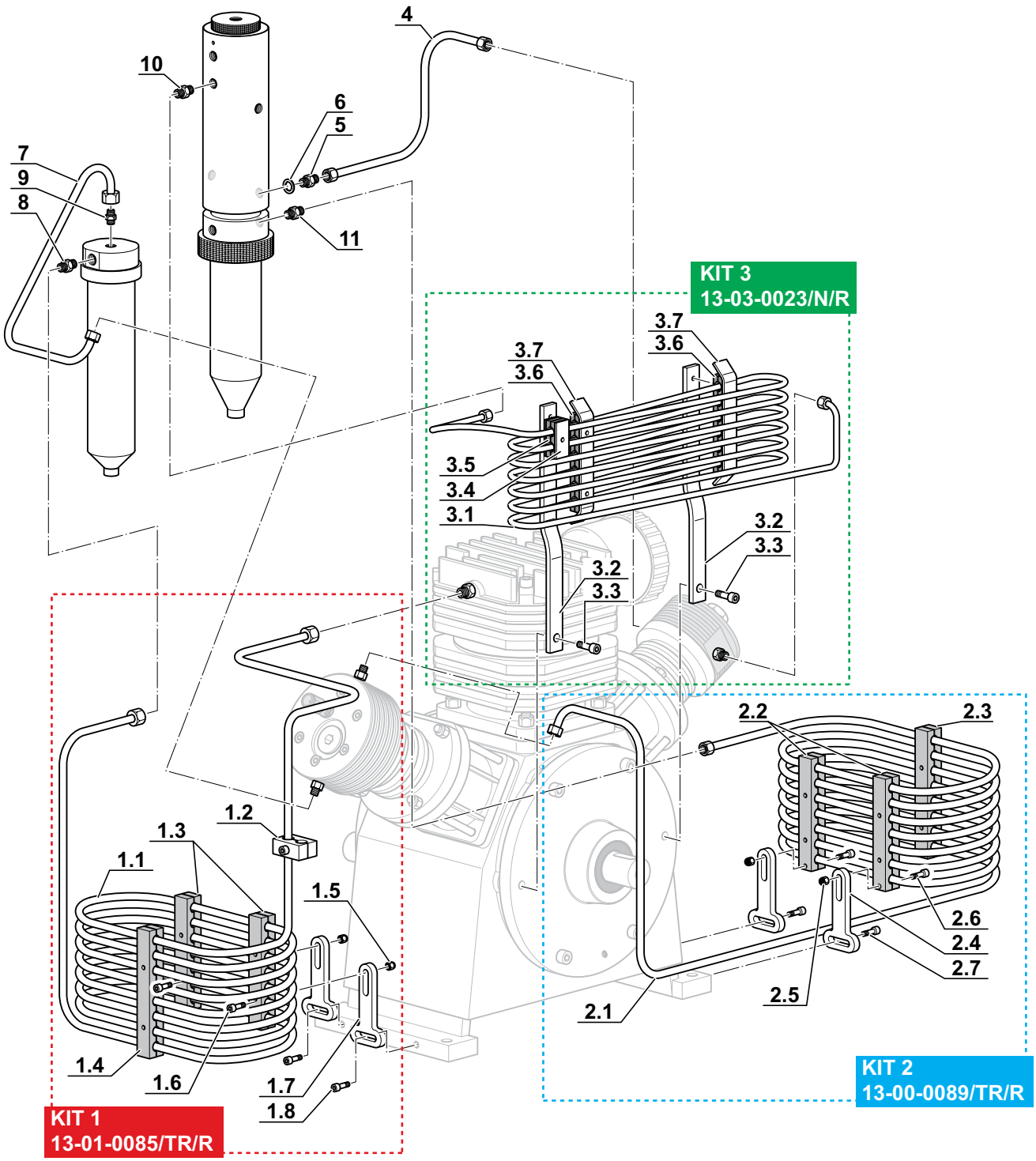

GUARNIZIONI GRUPPO POMPANTE - GASKETS PUMPING GROUP

Rif. Pos.	Q.tà Q.ty	Codice Code	Descrizione	Description
1	10	13-01-0011/R	KIT DA 10 O-RING 3281 NBR 90 SH	KIT WITH 10 O-RING 3281 NBR 90 SH
2	10	13-01-0007/R	KIT DA 10 O-RING 2400 NBR 90 SH (101.34X1.78)	KIT WITH 10 O-RING 2400 NBR 90 SH (101.34X1.78)
3	10	13-03-0123/R	KIT DA 10 O-RING 2100 VITON 90 (25.12X1.78)	KIT WITH 10 O-RING 2100 VITON 90 (25.12X1.78)
4	10	13-00-0015/R	KIT DA 10 O-RING 2275 NBR 90 SH (69.57X1.78)	KIT WITH 10 O-RING 2275 NBR 90 SH (69.57X1.78)
5	10	13-00-0039/R	KIT DA 10 O-RING 3237 NBR 90SH (60.00X2.62)	KIT WITH 10 O-RING 3237 NBR 90SH (60.00X2.62)
6	10	13-03-0029/90/R	KIT DA 10 O-RING 2062 VITON 90 (15.60X1.78)	KIT WITH 10 O-RING 2062 VITON 90 (15.60X1.78)
7	10	13-02-0056/R	KIT DA 10 O-RING 4087 VITON 90 (21.82X3.53)	KIT WITH 10 O-RING 4087 VITON 90 (21.82X3.53)
8	10	13-00-0062/R	KIT DA 10 O-RING 2562 NBR 90 SH	KIT WITH 10 O-RING 2562 NBR 90 SH
9	10	13-01-0013/R	KIT DA 10 O-RING 3137 NBR 90 SH (34.60X2.62)	KIT WITH 10 O-RING 3137 NBR 90 SH (34.60X2.62)
10	10	OR-114/90/R	KIT DA 10 O-RING 114 NBR 90 SH	KIT WITH 10 O-RING 114 NBR 90 SH
11	10	OR-2018/90/R	KIT DA 10 O-RING 2018 NBR 90 SH	KIT WITH 10 O-RING 2018 NBR 90 SH
12	10	13-01-0009/R	KIT DA 10 RONDELLA IN RAME 3/8 (17X23X1,5)	KIT WITH 10 WASHER COPPER 3/8 (17X23X1,5)
13	10	GUAR1319/R	KIT DA 10 RONDELLA 1/4 IN RAME	KIT WITH 10 WASHER COPPER 1/4
14	10	13-00-0053/R	KIT DA 10 RONDELLA IN RAME 21,5X28X1,5	KIT WITH 10 WASHER COPPER 21,5X28X1,5
15a	1	13-01-0005/N	GUARNIZIONE 1° ST. MCH13/16 NUOVA TESTA	GASKET 1° ST. MCH13/16 NEW HEAD
15b	1	13-01-0005	GUARNIZIONE 1° ST. MCH13/16	GASKET 1° ST. MCH13/16
16a	1	13-01-0003	GUARNIZIONE 1° STADIO Ø88MM	GASKET 1° STAGE Ø88MM
16b	1	16-01-0003	GUARNIZIONE 1° STADIO Ø97MM	GASKET 1° STAGE Ø97MM

GUARNIZIONI GRUPPO POMPANTE - GASKETS PUMPING GROUP

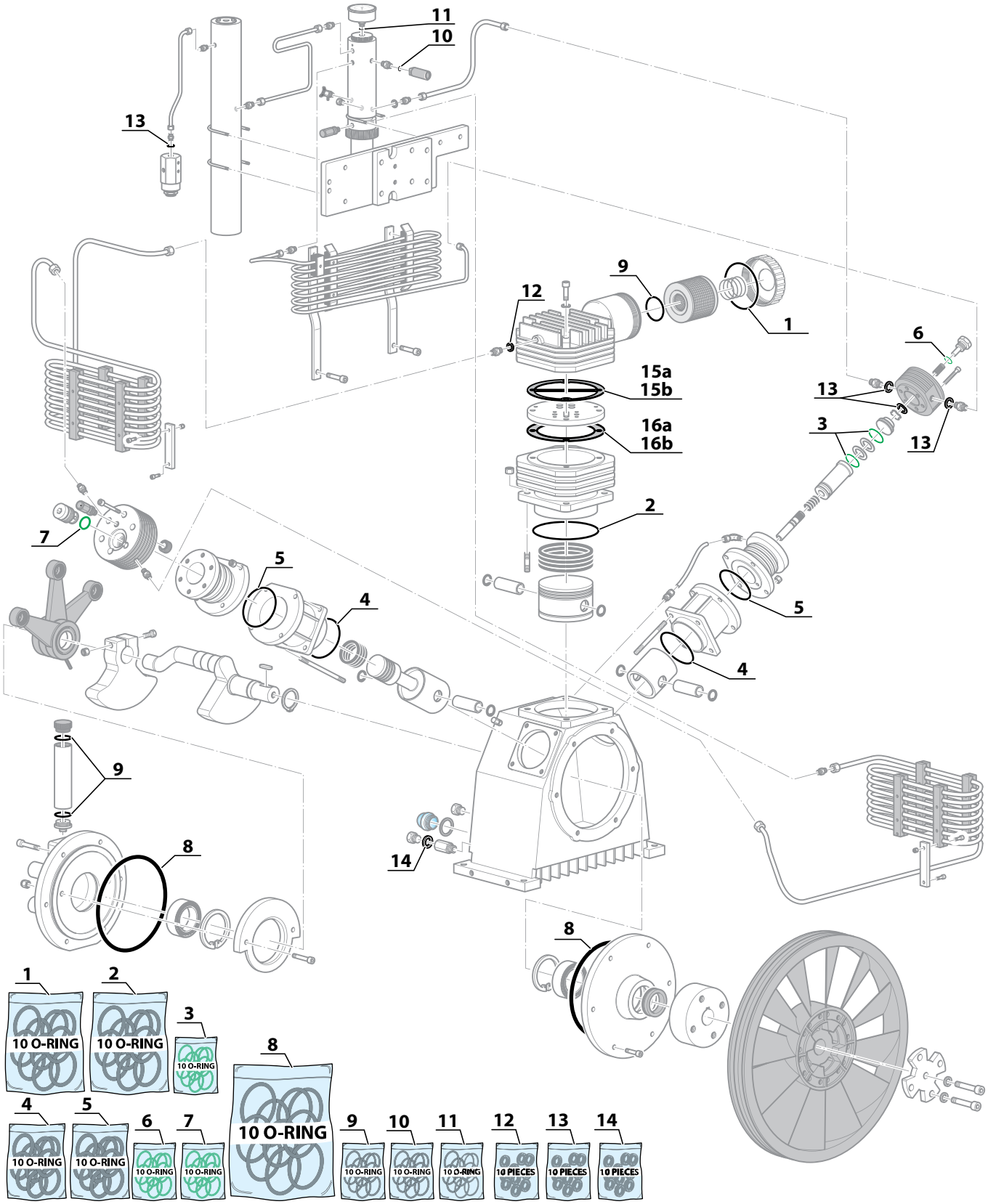

STAFFE DI FISSAGGIO - BRACKETS FIXING

Rif. Pos.	Q.tà Q.ty	Codice Code	Descrizione	Description
KIT1	1	13-00-0094/1/R	KIT PIASTRA PORTAFILTRI MCH13/16 ZINCA. CON BECCO	KIT HOLD-FILTERS PLATE MCH13/16
1.1	1		STAFFA PORTASEPARATORE	SEPARATOR CLAMP
1.2	2		VITE T.C.E. ZINC. 8x25 TESTA BASSA	SCREW T.C.E. ZINC. 8x25 REDUCED HEAD
1.3	2		VITE T.C.E. ZINC. 8X40	SCREW T.C.E.ZINC. 8x40
1.4	4		DADO ZINCATO M8 MEDIO	MIDDLE NUT M8 ZINC.
1.5	1		PIASTRA PORTAFILTRI MCH13/16 ZINCA. CON BECCO	HOLD-FILTERS PLATE MCH13/16
1.6	2		STAFFA PORTAFILTRO MCH13-16	FILTER HOLDING BRACKET MCH13/16
1.7	2		DADO ZINCATO AUTOBLOC. M8 ALTO	8MM SELF-LOCKING NUT
1.8	2		VITE T.C.E. ZINC. 8X20	SCREW T.C.E.ZINC. 8x20
1.9	1		CONTROPIASTRA PORTAFILTRO MCH13-16	COUNTER FILTERS PLATE MCH13/16
KIT2	1	13-00-0094/2/R	KIT PIASTRA QUADRA PORTA SEP. MCH13-16 TROPICAL	KIT SQUARE CONDENSATE SEP. PLATE MCH13-16 ZINC.
2.1	3		STAFFA PORTASEPARATORE	SEPARATOR CLAMP
2.2	2		DADO ZINCATO AUTOBLOC. M8 ALTO	8MM SELF-LOCKING NUT
2.3	4		VITE 8X25 T.C.E. ZINC. DIN 912	SCREW 8X25 T.C.E. ZINC. DIN 912
2.4	4		DADO ZINCATO M8 MEDIO	MIDDLE NUT M8 ZINC.
2.5	1		PIASTRA PORTA SEP. MCH13/16 ZINCATA BIANCA	CONDENSATE SEPARATOR PLATE MCH13-16 ZINC.
2.6	1		PIASTRA QUADRA PORTA SEP. MCH13-16 TROPICAL	SQUARE CONDENSATE SEP. PLATE MCH13-16 ZINC.

STAFFE DI FISSAGGIO - BRACKETS FIXING

KIT1 - 13-00-0094/1/R

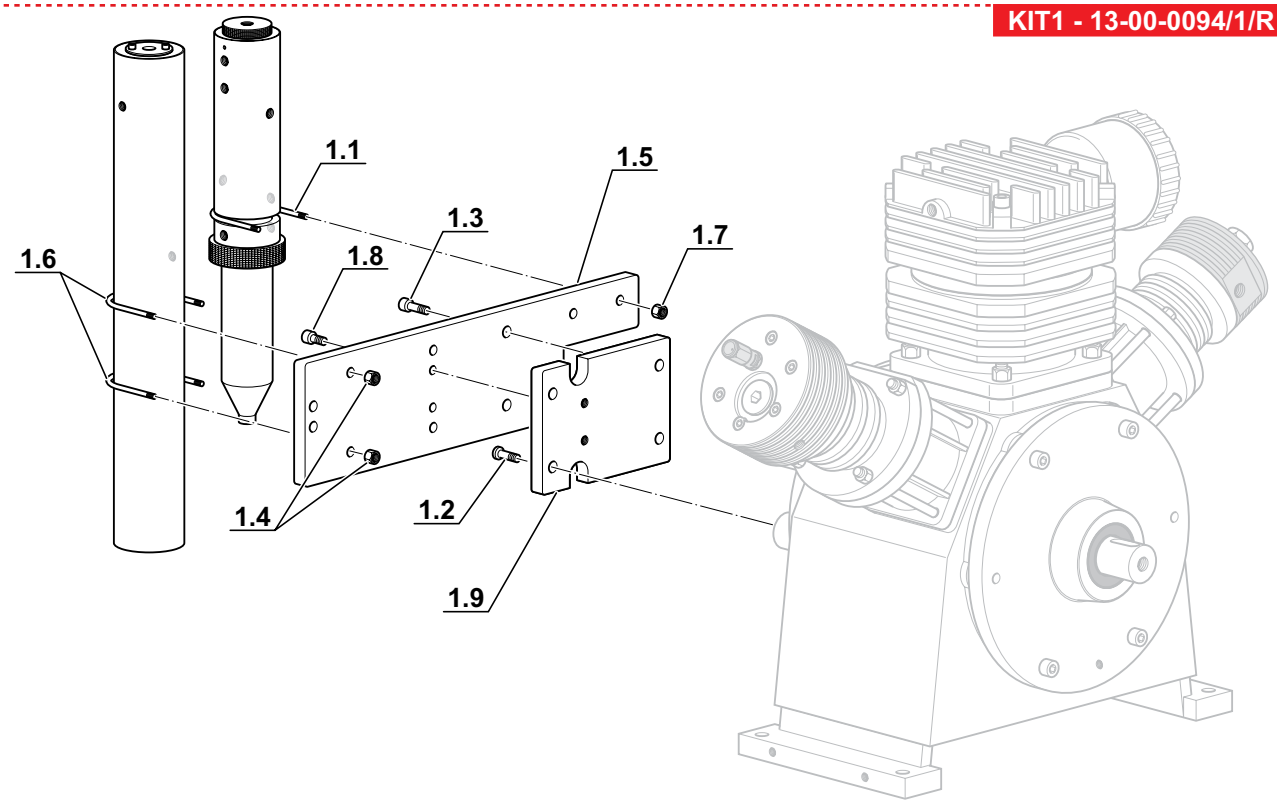

KIT2 - 13-00-0094/2/R

SOLO PER TROPICAL - TROPICAL PLUS
ONLY TROPICAL - TROPICAL PLUS

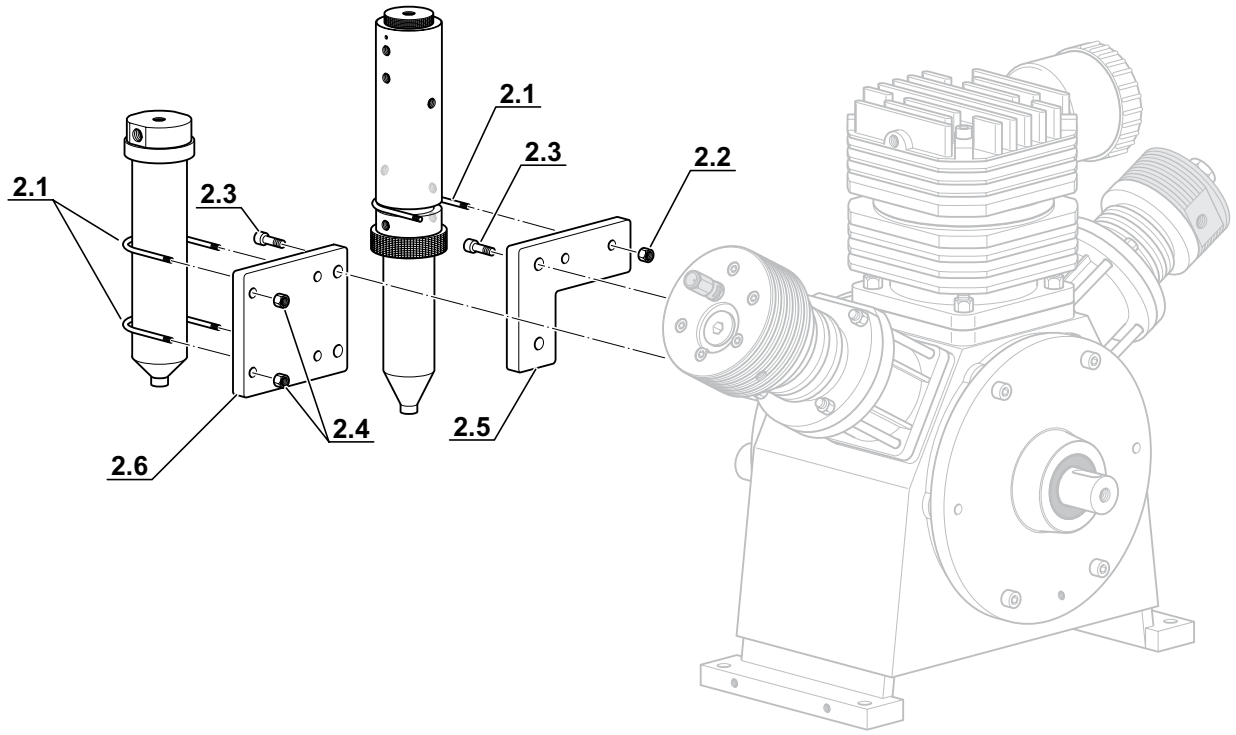

SEPARATORE DI CONDENSA - CONDENSATE SEPARATOR

Rif. Pos.	Q.tà Q.ty	Codice Code	Descrizione	Description
KIT1	1	13-00-0118/R	KIT TAPPO SEPARATORE	CONDENSATE SEPARATOR PLUG KIT
1.1	1		TAPPO SEPARATORE MCH13/16	CONDENSATE SEPARATOR PLUG
1.2	2		O RING 4143 NBR 90 (36,1X3,53)	O RING 4143 NBR 90 (36,1X3,53)
1.3	1		O RING 2018 NBR 90	O RING 2018 NBR 90
1.4	1		MOLLA VALVOLA DI NON RITORNO	CHECK VALVE SPRING
1.5	1		PISTONE VALVOLA DI NON RITORNO	CHECK VALVE PISTON
1.6	1		O RING 2021 NBR 90(5,28X1.78)	O RING 2021 NBR 90(5,28X1.78)
1.7	1		O RING 114 NBR 90 (11.11X1.78)	O RING 114 NBR 90 (11.11X1.78)
1.8	1		RACC. PORTAFILTRO SEP. NUOVO MCH-13/16	MCH-13/16 SEPARATOR FITTING
1.9	1		CAMPANA DIAM. 38 C/F D.12,5 IN ALL. SP. 1	D38 C/F D.12,5 IN ALL. SP. 1 WASHER
1.10	1		SILENZIATORE 1/4 E90A4003	SILENCER 1/4 E90A4003
KIT2	1	13-00-115/N/R	KIT CORPO SEPARATORE MCH13/16 NUOVO	NEW SEPARATOR BODY MCH13/16 KIT
2.1	1		CORPO SEPARATORE MCH13/16 NUOVO	NEW SEPARATOR BODY MCH13/16
2.2	1		O-RING 2212 NBR90 (53.67X1.78)MCH36	O-RING 2212 NBR90 (53.67X1.78)MCH36
2.3	1		DIFFUSORE SEPARATORE DI CONDENSA MCH13/16	NEW CONDENSATE SEPARATOR DIFFUSER MCH13/16
2.4	1		RACC. PORTAFILTRO SEP. NUOVO MCH-13/16	MCH-13/16 SEPARATOR FITTING
2.5	1		CAMPANA DIAM. 48 C/F D.12,5 IN ALL. SP. 1	D48 C/F D.12,5 IN ALL. SP. 1 WASHER
2.6	1		SILENZIATORE 1/4 E90A4003	SILENCER 1/4 E90A4003
KIT3	1	36-00-0600/180/R	KIT SEPARATORE DIAM. 54 AISI 316L LUNGH. 180MM	D 54 AISI 316L LUNGH. 180MM SEPARATOR KIT
3.1	1		O-RING 2212 NBR90 (53.67X1.78)MCH36	O-RING 2212 NBR90 (53.67X1.78)MCH36
3.2	1		SEPARATORE DIAM. 54 AISI 316L LUNGH. 180MM	D 54 AISI 316L LUNGH. 180MM SEPARATOR
3.3	1		GHIERA SEPARATORE MCH36	SEPARATOR NUT MCH36
KIT4	1	6-05-001A/500	MAN.0-500 BAR/PSI SENZA FLANGIA	MANOMETER 0-500 BAR MCH/6
4.1	1		O RING 2018 NBR 90	O RING 2018 NBR 90
KIT5	1	13-05-012/R	KIT SEP. DI CONDENSA G3/8 MCH-13-16 TROPICAL	CONDENSATE SEP. G3/8 MCH-13-16 TROPICAL KIT
5.1	1		TAPPO DX SEPARATORE G3/8 3°STADIO	3RD STAGE G3/8 SEPARATOR RIGHT PLUG
5.2	1		O-RING 2212 NBR90 (53.67X1.78)MCH36	O-RING 2212 NBR90 (53.67X1.78)MCH36
5.3	1		SEP. DIAM. 54 AISI 316L LUNGH. 180MM X MCH13/16	CONDENSATE SEPARATOR PIPE, STAINLESS 180MM
5.4	1		GHIERA SEPARATORE	SEPARATOR RING
5.5	1		KIT TAPPO INTERNO SEP. NUOVO MCH-13/16	MCH-13/16 SEPARATOR FITTING INTERNAL PLUG KIT
KIT6	1	36-05-050/ALL/R	KIT TAPPO INTERNO SEP. NUOVO MCH-13/16	MCH-13/16 SEPARATOR FITTING INTERNAL PLUG KIT
6.1	1		OR- 2150 (37,82X1,78) NBR 90SH	OR- 2150 (37,82X1,78) NBR 90SH
6.2	1		TAPPO INTERNO SEP. NUOVO MCH-13/16	MCH-13/16 SEPARATOR FITTING INTERNAL PLUG
6.3	2		DIFFUSORE SEPARATORE DI CONDENSA MCH13/16	NEW CONDENSATE SEPARATOR DIFFUSER MCH13/16
6.4	1		RACC. PORTAFILTRO SEP. NUOVO MCH-13/16	MCH-13/16 SEPARATOR FITTING
6.5	1		RONDELLA DIAM. 48 C/F D.12,5 IN ALL. SP. 1	D48 C/F D.12,5 IN ALL. SP. 1 WASHER
6.6	1		SILENZIATORE 1/4 E90A4003	SILENCER 1/4 E90A4003
7	1	13-00-0206	VALVOLA SICUREZZA 2° STADIO 70BAR	2ND STAGE SAFETY VALVE 70BAR

SEPARATORE DI CONDENSA - CONDENSATE SEPARATOR

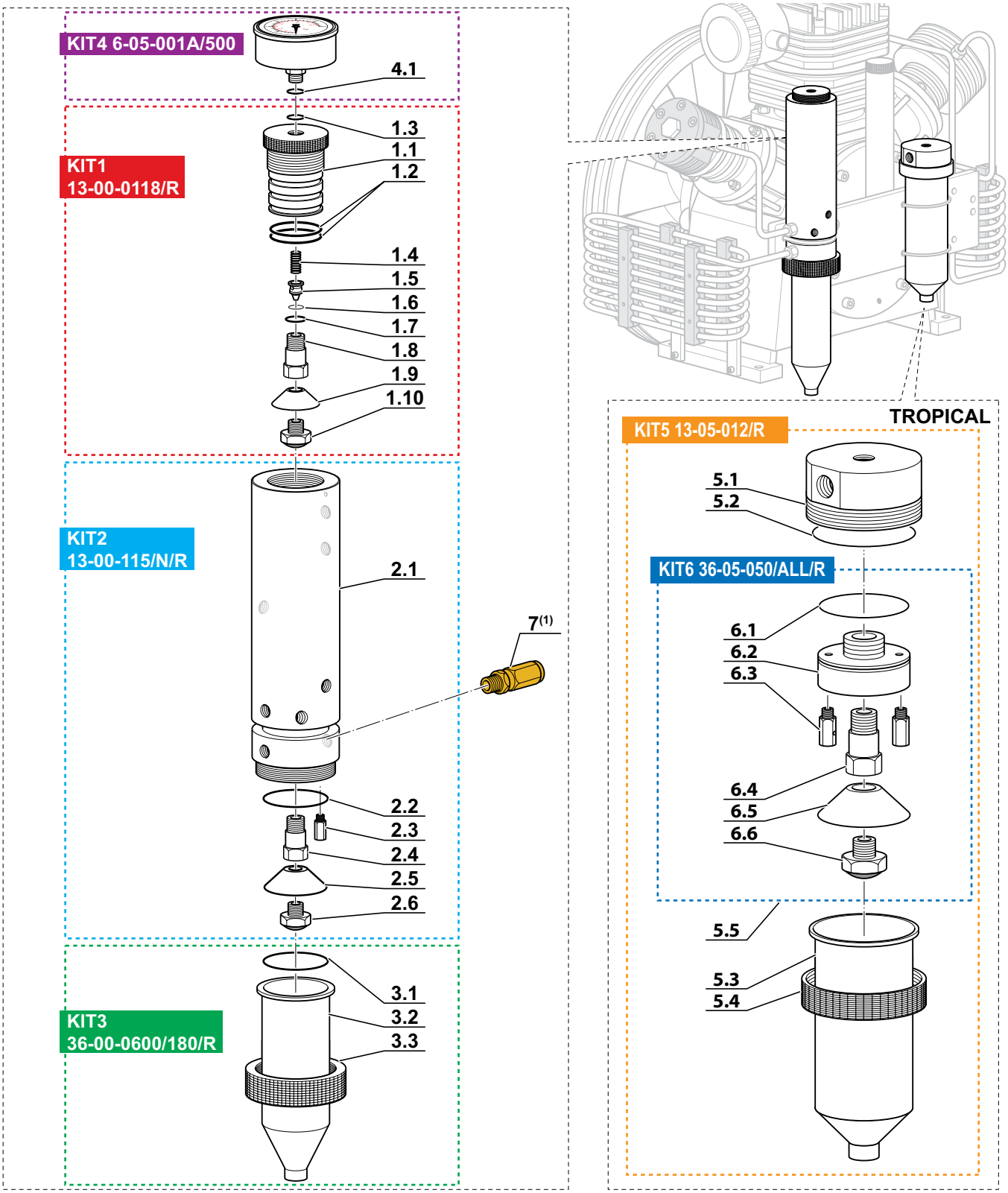

7(1) La valvola deve essere stretta con una coppia di serraggio di **20Nm** - The valve must be tightened with a torque of **20Nm**

MAXIFILTRO DEPURATORE - MAXIFILTER PURIFIER

Rif. Pos.	Q.tà Q.ty	Codice Code	Descrizione	Description
KIT1a	1	13-00-0097/R	KIT MAXIFILTRO	MAXIFILTER KIT
KIT1b	1	13-00-0097/SS/R	KIT MAXIFILTRO SILENT	SILENT MAXIFILTER KIT
1.1a	1		CORPO MAXI FILTRO	MAXI FILTER BODY
1.1b	1		CORPO MAXI FILTRO PER SUPER SILENT EVO	MAXI FILTER BODY FOR SUPER SILENT EVO
1.2	2		VITE T.C.E. INOX 8X12 DIN 912	T.C.E. INOX 8X12 SCREW
1.3	1		VITE T.C.E. INOX 8X30 DIN912	SCREW T.C.E. INOX 8X30
1.4	1		TAPPO SUPERIORE FILTRO	UPPER FILTER CAP
1.5	1		TAPPO INTERNO FILTRO	INTERNAL FILTER CAP
1.6	3	13-00-0155	O-RING 6162 NBR90 (40.65X5,33)	O-R CAP FILTER
1.7	1		TAPPO INFERIORE FILTRO MCH 13/16	LOWER FILTER CAP
KIT2a	1	SC000440/PP	CARTUCCIA MAXIFILTER CARB. ATT./SET. MOL.	MAXIFILTER A. CARBON /M. SIEVE CARTRIDGE
KIT2b	1	SC000440/PP/SM	CARTUCCIA MAXIFILTER SETACCIO MOLECOLARE	MAXIFILTER MOLECULAR SIEVE CARTRIDGE
KIT2c	1	SC000440/PP/CARB	CARTUCCIA MAXIFILTER CARBONE ATTIVO	MAXIFILTER ACTIVE CARBON CARTRIDGE
KIT2d	1	SC000440/PP/CO-CATALYST	CARTUCCIA MAXIFILTER CARB./SET./HOPKALITE	MAXIFILTER CARBON/SIEVE/HOPKALITE CARTRIDGE
2.1	1		O-RING 3050 NBR 90SH(12.37X2.62)	O-RING 3050 NBR 90SH(12.37X2.62)
2.2	1		CORPO CARTUCCIA MAXIFILTER PP	CATRIDGE MAXIFILTER BODY PP
2.3	2		DISCO FORATO PP Ø39MM	PERFORATED DISK PP Ø39MM
2.4	1		TAPPO CARTUCCIA MAXIFILTER PP	CARTRIDGE CAP MAXIFILTER PP
2.5	3		MOLLA MAXIFILTER	MAXIFILTER SPRING
2.6	3		DISCO FELTRO DIAMETRO 40MM	FELT DISK DIAM.40 MM.
2.7	1	SC000350	CARBONE ATTIVO GRANULARE	ACTIVE CARBON
2.8	1	SC000380	SETACCIO MOLECOLARE	MOLECULAR SIEVE
2.9	1	SC000355	FISSATORE MONOSSIDO DI CARBONIO 814	CO CATALYST MOLECULITE 814

MAXIFILTRO DEPURATORE - MAXIFILTER PURIFIER

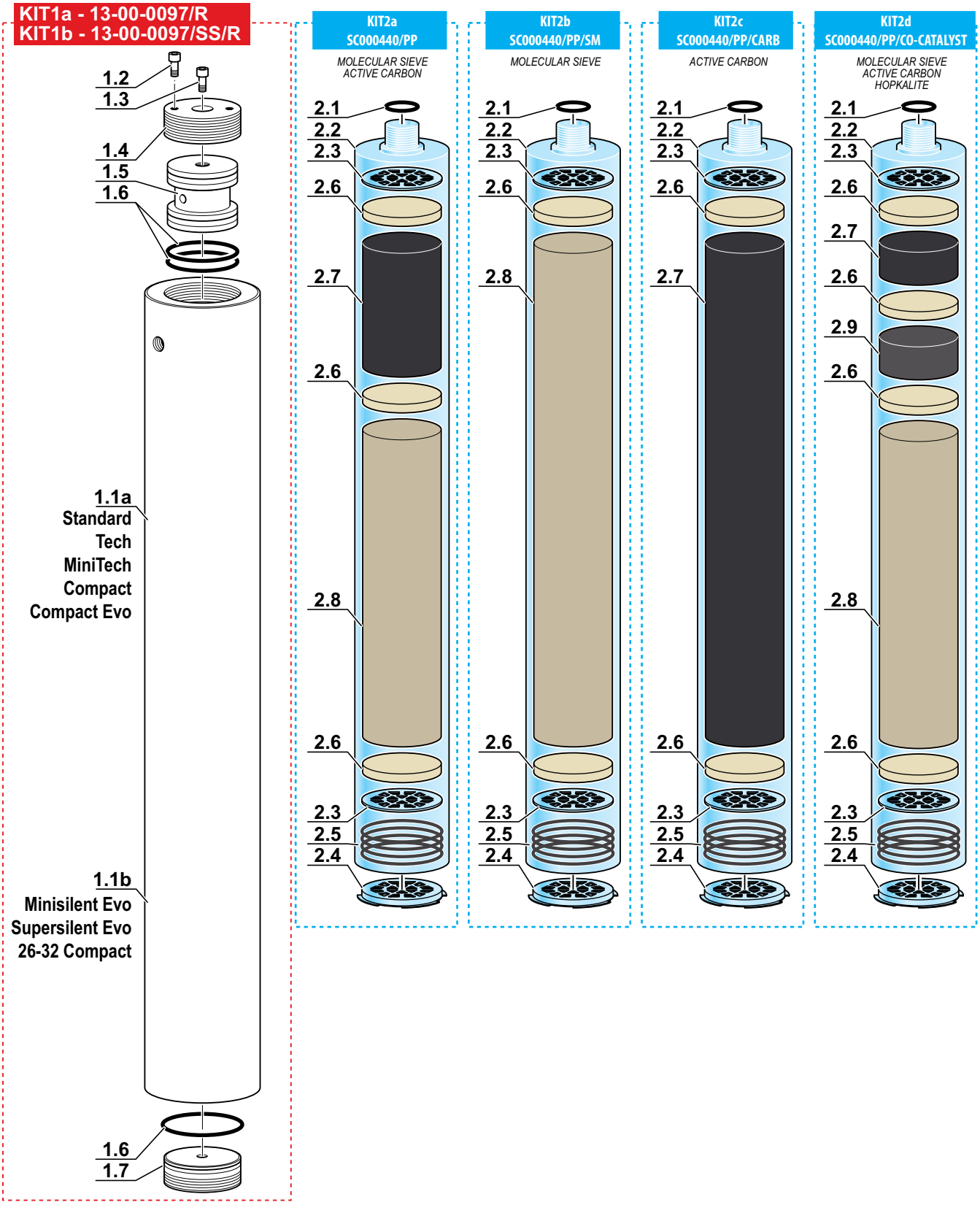

HYPERFILTER DEPURATORE - HYPERFILTER PURIFIER

Rif. Pos.	Q.tà Q.ty	Codice Code	Descrizione	Description
KIT1	1	RE100368	HYPER FILTER (senza cartuccia Hyper)	HYPER FILTER (without Hyper cartridge)
1.1	1		MOLLA CARTUCCIA HYPER FILTER	HYPERFILTER CARTRIDGE SPRING
1.2	1		CORPO HYPER FILTER 110MM	HYPERFILTER BODY 110MM
1.3	2		VITE T.C.E. ZINC. 10X16 DIN912	SCREW T.C.E. ZINC. 10X16 DIN912
1.4	1		TAPPO SUPERIORE SENZA SENSORE	UPPER PLUG WITHOUT SENSOR
1.5	2		O-RING 6262 NBR90	O-RING 6262 NBR90
1.6	1		TAPPO INFERIORE HYPER FILTER FORI DA 1/4G	LOWER CAP HYPERFILTER HOLES TO 1/4G
KIT2a	1	36-07-034/B-AC	CARTUCCIA HYPERFILTER CARB. ATT./SET.MOL.	HYPERFILTER ACT. CARB./MOLEC. SIEVE CARTRIDGE
KIT2b	1	36-07-034/A-MS	CARTUCCIA HYPERFILTER SETACCIO MOLECOLARE	HYPERFILTER MOLECULAR SIEVE CARTRIDGE
KIT2c	1	36-07-034/CAR	CARTUCCIA HYPERFILTER CARBONE ATTIVO	HYPERFILTER ACTIVE CARBON CARTRIDGE
KIT2d	1	36-07-034/B-AC/MOL	CARTUCCIA HYPERFILTER CARB./SET./HOPKALITE	HYPERFILTER CARBON/SIEVE/HOPKALITE CARTRIDGE
2.1	1		GANCIO INOX CARTUCCIA HYPERFILTER	STEEL HOOK HYPERFILTER CARTRIDGE
2.2	1		TAPPO SUPERIORE CARTUCIA HYPERFILTER	TOP CAP HYPERFILTER CARTRIDGE
2.3	2		O-RING 3237/70SH (60x2.62)	O-RING 3237/70SH (60x2.62)
2.4	1		CORPO CARTUCCIA HYPERFILTER	CARTRIDGE BODY HYPERFILTER CARTRIDGE
2.5	6		DISCO FELTRO 66x11	FELT DISC 66x11
2.6	1		SETACCIO MOLECOLARE	MOLECULAR SIEVE
2.7	1		CARBONE ATTIVO GRANULARE	ACTIVE CARBON
2.8	1		DISCO INOX FORATO HYPERFILTER	INOX DISC HYPERFILTER CARTRIDGE
2.9	1		MOLLA CARTUCCIA HYPER FILTER	SPRING HYPERFILTER CARTRIDGE
2.10	1		TAPPO INFERIORE CARTUCCIA FILTRO PRESEC	LOWER CAP PRESEC FILTER CARTRIDGE
2.11	1		RACC. TAPPO INFERIORE CARTUCCIA HYPERFILTER	LOWER FITTING HYPERFILTER CARTRIDGE
2.12	1		O-RING 115 NBR 90 (11,91X2,62)	O-RING 115 NBR 90 (11,91X2,62)
2.13	1		O-RING 112 NBR 90	O-RING 112 NBR 90
2.14	1		FISSATORE MONOSSIDO DI CARBONIO 814	CO CATALYST MOLECULITE 814

HYPERFILTER DEPURATORE - HYPERFILTER PURIFIER

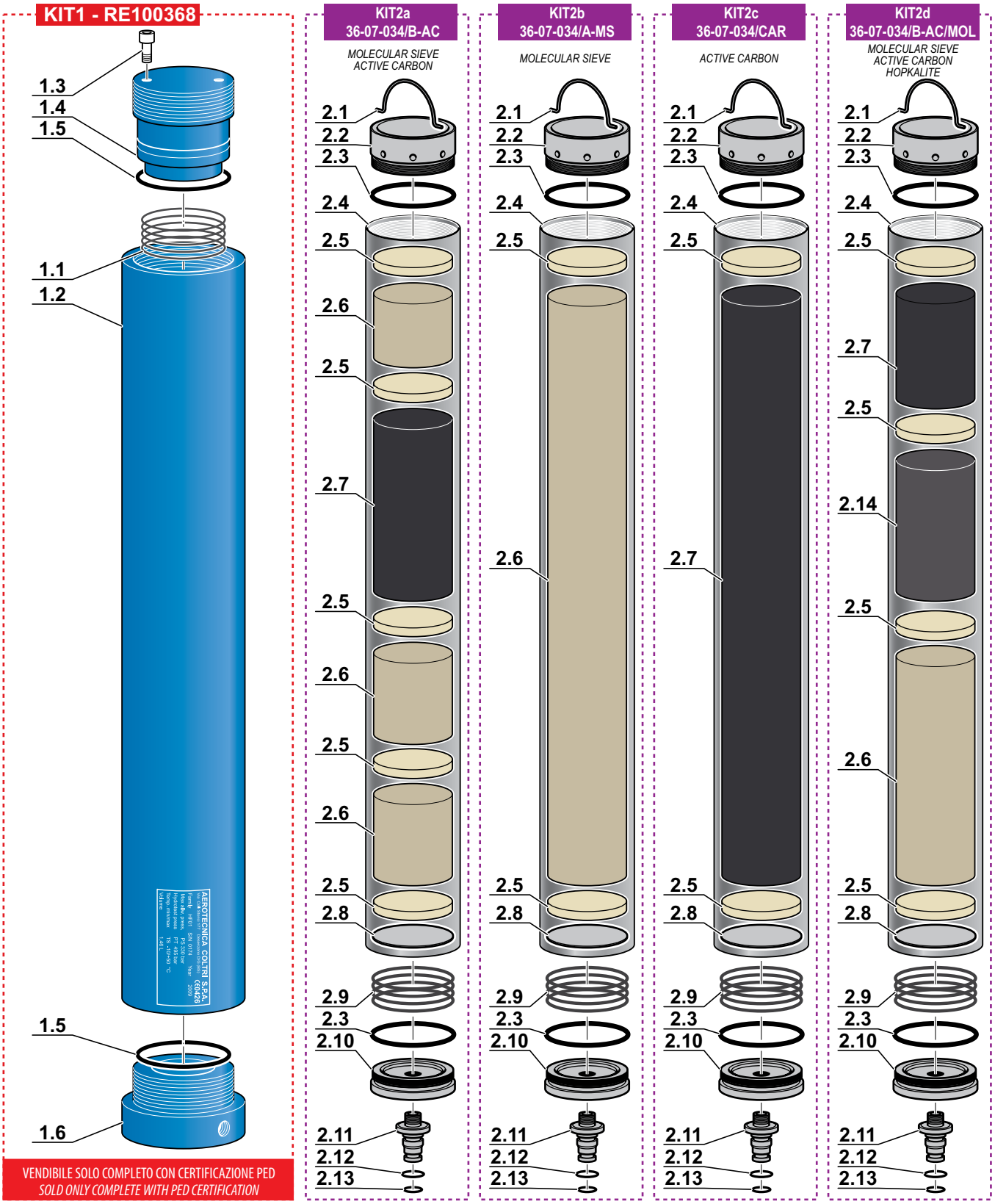

HYPERFILTER DEPURATORE CON PRESEC - HYPERFILTER PURIFIER WITH PRESEC

Rif. Pos.	Q.tà Q.ty	Codice Code	Descrizione	Description
KIT1	1	RE100366	HYPER FILTER PRESEC (senza cartuccia Hyper)	HYPER FILTER PRESEC (without Hyper cartridge)
1.1	1		MOLLA CARTUCCIA HYPER FILTER	HYPERFILTER CARTRIDGE SPRING
1.2	1		CORPO HYPER FILTER	HYPERFILTER BODY
1.3	1		CONNETTORE PRESEC	PRESEC CONNECTOR
1.4	2		VITE T.C.E. ZINC. 10X16 DIN912	SCREW T.C.E. ZINC. 10X16 DIN912
1.5	1		TAPPO SUPERIORE CON SENSORE HYPER FILTER	UPPER PLUG WITH SENSOR
1.6	2		O-RING 6262 NBR90	O-RING 6262 NBR90
1.7	1		SENSORE PRESEC	PRESEC SENSOR
1.8	1		TAPPO INFERIORE HYPER FILTER FORI DA 1/4G	LOWER CAP HYPERFILTER HOLES TO 1/4G
KIT2a	1	SC000543	CARTUCCIA HYPERFILTER PRESEC CARB./SET.	HYPERFILTER PRESEC CARBON/SIEVE CARTRIDGE
KIT2b	1	SC000543/CO	CARTUCCIA HYPERFILTER PRESEC CARB./SET./HOPKALITE	HYPERFILTER PRESEC CARB./SIEVE/HOPK. CARTRIDGE
2.1	1		GANCIO INOX CARTUCCIA HYPERFILTER	STEEL HOOK HYPERFILTER CARTRIDGE
2.2	1		TAPPO SUPERIORE CARTUCIA HYPERFILTER	TOP CAP HYPERFILTER CARTRIDGE
2.3	2		O-RING 3237/70SH (60x2.62)	O-RING 3237/70SH (60x2.62)
2.4	1		CORPO CARTUCCIA HYPERFILTER	CARTRIDGE BODY HYPERFILTER CARTRIDGE
2.5	6		DISCO FELTRO 66x11	FELT DISC 66x11
2.6	1		SETACCIO MOLECOLARE	MOLECULAR SIEVE
2.7	1		CARBONE ATTIVO GRANULARE	ACTIVE CARBON
2.8	1		DISCO INOX FORATO HYPERFILTER	INOX DISC HYPERFILTER CARTRIDGE
2.9	1		MOLLA CARTUCCIA HYPER FILTER	SPRING HYPERFILTER CARTRIDGE
2.10	1		TAPPO INFERIORE CARTUCCIA FILTRO PRESEC	LOWER CAP PRESEC FILTER CARTRIDGE
2.11	1		RACC. TAPPO INFERIORE CARTUCCIA HYPERFILTER	LOWER FITTING HYPERFILTER CARTRIDGE
2.12	1		O-RING 115 NBR 90 (11,91X2,62)	O-RING 115 NBR 90 (11,91X2,62)
2.13	1		O-RING 112 NBR 90	O-RING 112 NBR 90
2.14	1		FISSATORE MONOSSIDO DI CARBONIO 814	CO CATALYST MOLECULITE 814
2.15	1		ANELLO SEEGER A7	SEEGER A7
2.16	1		ANELLO SEEGER A14	SEEGER A14
2.17	1		FLANGIA PVC PORTA SENSORE	FLANGE PVC HOLDER SENSOR
2.18	1		SENSORE PRESEC	PRESEC SENSOR
2.19	1		DISCO ALL. SENSORE PRESEC 38X3X1MM	ALUMINUM RING PRESEC 38X3X1MM
2.20	1		VITE TC 3x5	SCREW TC 3x5
2.21	1		DISCO FELTRO PRESEC CON FORO DIAM. 16 66X11	PERFORATED FELT DISC 66x11

HYPERFILTER DEPURATORE CON PRESEC - HYPERFILTER PURIFIER WITH PRESEC

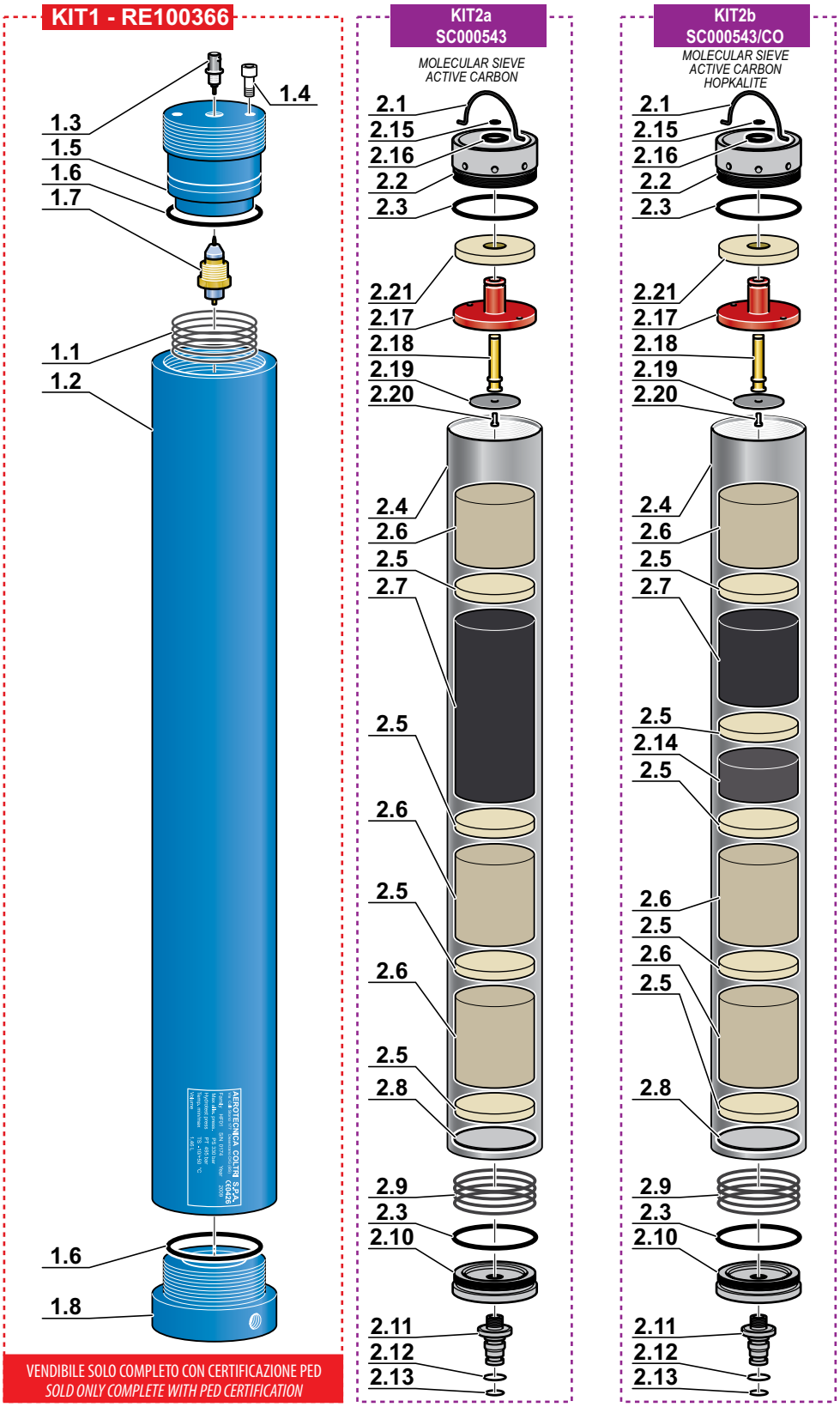

VALVOLA DI SICUREZZA - SAFETY VALVE

Rif. Pos.	Q.tà Q.ty	Codice Code	Descrizione	Description
1a	1	6-05-015/2/2200	VALVOLA DI SICUREZZA 200 BAR	SAFETY VALVE 200 BAR
1b	1	6-05-015/2/232	VALVOLA DI SICUREZZA 232 BAR	SAFETY VALVE 232 BAR
1c	1	6-05-015/2/250	VALVOLA DI SICUREZZA 250 BAR	SAFETY VALVE 250 BAR
1d	1	6-05-015/2/300	VALVOLA DI SICUREZZA 300 BAR	SAFETY VALVE 300 BAR
1e	1	6-05-015/2/330	VALVOLA DI SICUREZZA 330 BAR	SAFETY VALVE 330 BAR
1f	1	6-05-015/2/360	VALVOLA DI SICUREZZA 360 BAR	SAFETY VALVE 360 BAR
2	1	OR-114/90	O-RING 114 NBR 90	O-RING 114 NBR 90
3	1	6-05-015H/N	RACC. VALVOLA SICUREZZA 1/8NPT-M12 PASSO 1,25	SAFETY VALVE FITTING 1/8NPT-M12X1,25

VALVOLA MANTENIMENTO PRESSIONE - PRESSURE MAINTENANCE VALVE

Rif. Pos.	Q.tà Q.ty	Codice Code	Descrizione	Description
KIT1a	1	13-00-0127/1	VALVOLA DI MANTENIMENTO 1/8	MANTAINING PRESSURE VALVE 1/8
KIT1b	1	36-07-044	VALVOLA DI MANTENIMENTO 1/4	MANTAINING PRESSURE VALVE 1/4
1.1a	1		CORPO VALV. MANTENIMENTO 1/8NPT	MAINTENANCE VALVE BODY 1/8 NPT
1.1b	1		CORPO VALV. MANTENIMENTO 1/4NPT	MAINTENANCE VALVE BODY 1/4 NPT
1.2	2		O RING 2015 NBR 90 (3,69X1,78)	O RING 2015 NBR 90 (3,69X1,78)
1.3	1		PISTONE VALVOLA MANTENIMENTO MCH 13/16	MAINTENANCE VALVE PISTON MCH13/16
1.4	1		DADO VALV. MANT. PRESSIONE ALL. M20X1,5	VMP NUT M20X1,5
1.5	1		RONDELLA TEFLON PER PISTONE VMP	TEFLON RING VMP PISTON
1.6	1		VITE VALVOLA MANTENIMENTO MCH 13/16	MAINTENANCE VALVE SCREW MCH13/16
1.7	1		DISTANZIALE MOLLA PISTONE VPM	VMP PISTON SCREW SPACER
1.8	1		MOLLA VALVOLA SICUREZZA	SAFETY VALVE SPRING
1.9	1		CAPPUCCIO VALVOLA MANT.PRESS. ALL.	VMP CAP
1.10	1		SFERA ACCIAIO INOX Ø6 VMP	STAINLESS STEEL BALL Ø6 VMP
1.11	1		O RING 2031 NBR 90 (7,65x1,78)	O RING 2031 NBR 90 (7,65x1,78)

VALVOLA DI SICUREZZA - VALVOLA MANTENIMENTO PRESSIONE
SAFETY VALVE - PRESSURE MAINTENANCE VALVE

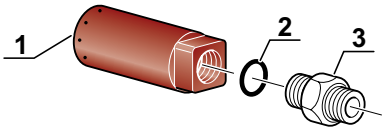



1a - 6-05-015/2/200 (200bar-2900PSI)

1b - 6-05-015/2/232 (232bar-3300PSI)

1c - 6-05-015/2/250 (250bar-3600PSI)

1d - 6-05-015/2/300 (300bar-4300PSI)

1e - 6-05-015/2/330 (330bar-4700PSI)

1f - 6-05-015/2/360 (360bar-5200PSI)

VALVOLA DI SICUREZZA
SAFETY VALVE

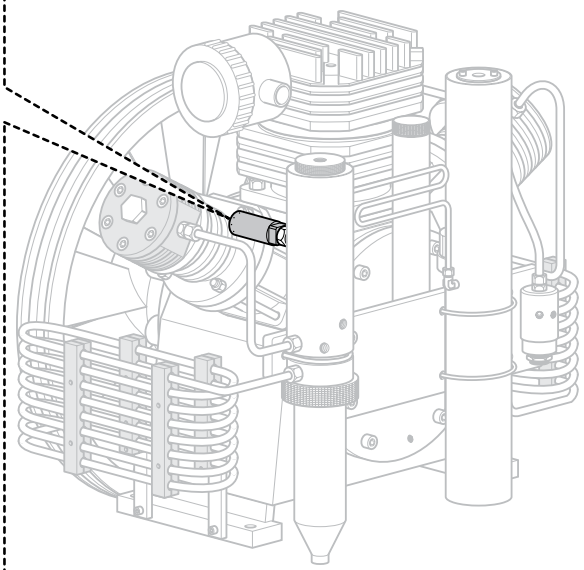

VALVOLA MANTENIMENTO PRESSIONE
PRESSURE MAINTENANCE VALVE

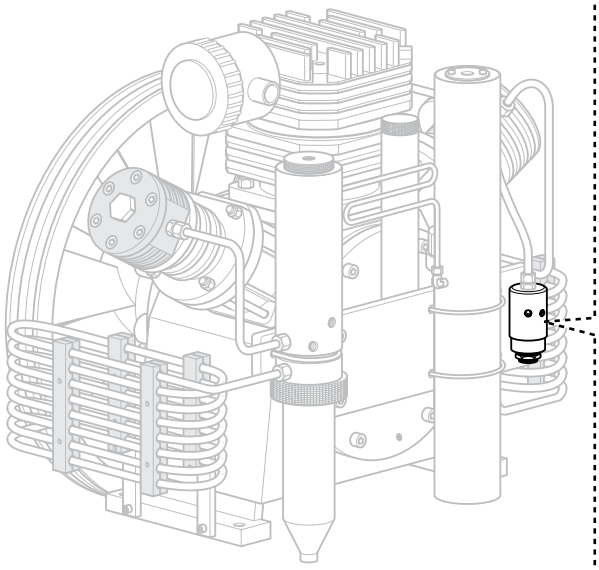

STANDARD - TECH - MINITECH

KIT1a(1/8) - 13-00-0127/1

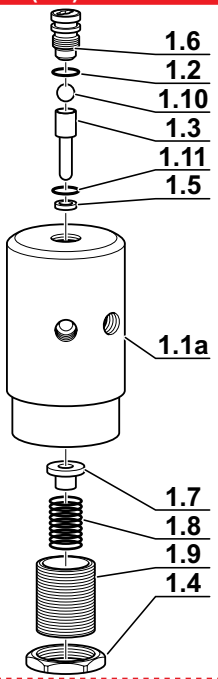

COMPACT - SILENT - MINISILENT

KIT1b(1/4) - 36-07-044

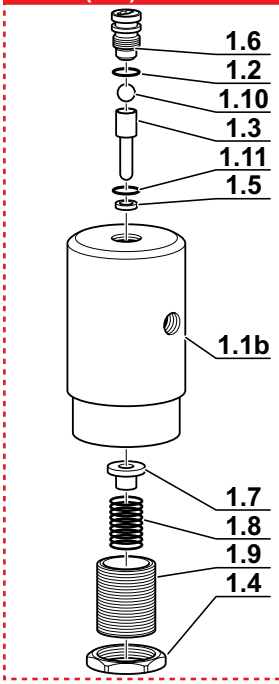

CIRCUITO DI FILTRAZIONE - FILTERING CIRCUIT

Mod: Standard - MiniTech

Rif. Pos.	Q.tà Q.ty	Codice Code	Descrizione	Description
1	3	13-00-0174E	RACCORDO 1/8 NPT TUBO 6MM	FITTING 1/8 NPT TUBE 6 MM
2	1	TUBO/MCH13/B/N/P	TUBO COLLEGAM. FILTRO/SEP. (B)	SEPARATOR-FILTER TUBE CONNECTION13/16
3	1	13-04-0320/P	TUBO COLLEG. FIL.VALV.MANT.(A)	FILTER-VMP TUBE CONNECTION MCH13/16
4	1	13-00-0025E	RACCORDO 1/4 G -TUBO 6MM DIRITTO ERMETO	FITTING 1/4 G -TUBO 6MM ERMETO
5	1	GUAR1319	RONDELLA 1/4 IN RAME	COPPER WASHER 1/4

CIRCUITO DI FILTRAZIONE - FILTERING CIRCUIT
Mod: Standard - MiniTech

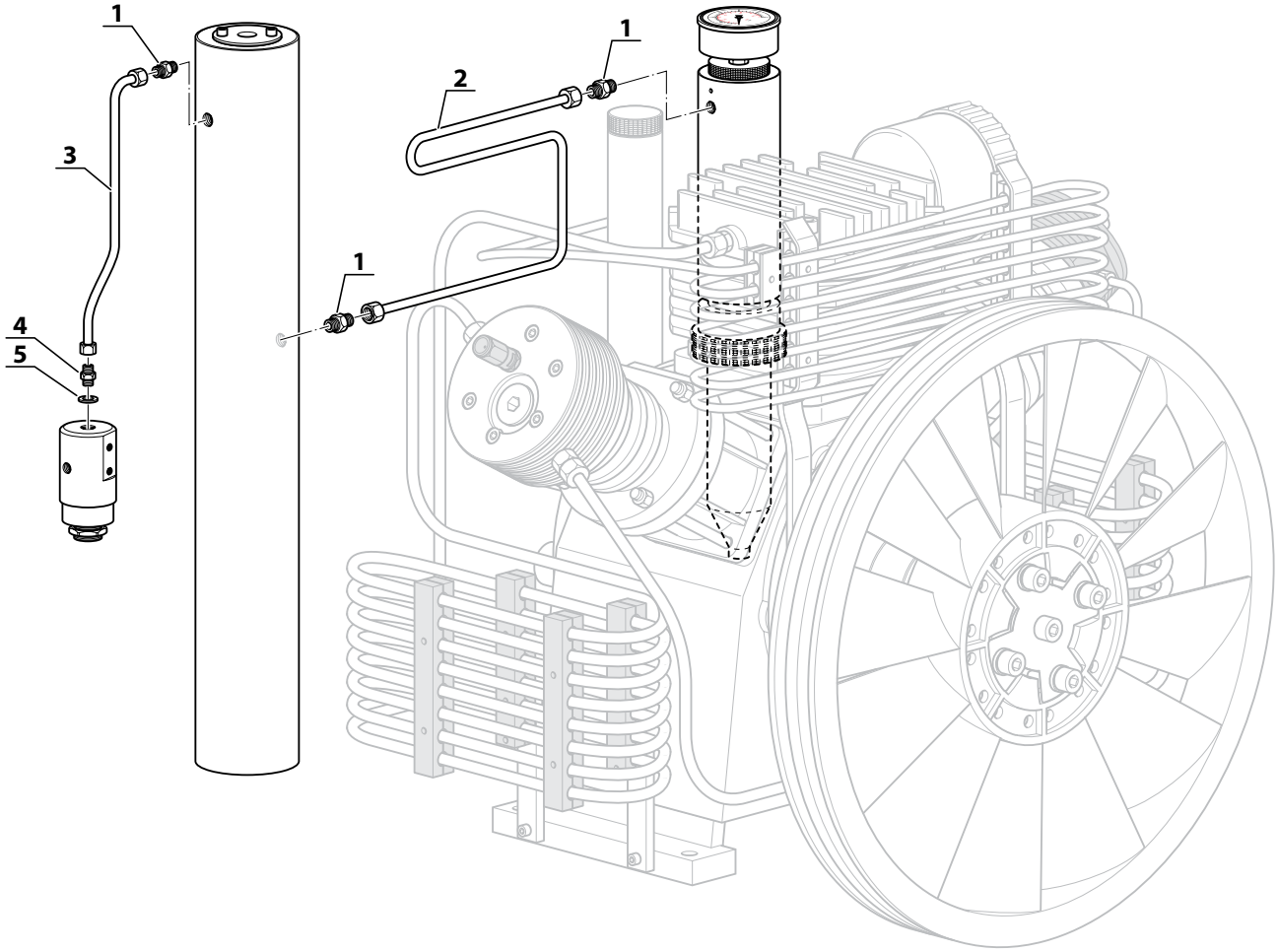

CIRCUITO DI FILTRAZIONE - FILTERING CIRCUIT

Mod: Tech

Rif. Pos.	Q.tà Q.ty	Codice Code	Descrizione	Description
1	3	13-00-0174E	RACCORDO 1/8 NPT TUBO 6MM	FITTING 1/8 NPT TUBE 6 MM
2	1	TUBO/MCH13/B/N/P	TUBO COLLEGAM. FILTRO/SEP. (B)	SEPARATOR-FILTER TUBE CONNECTION13/16
3	1	13-04-0320/P	TUBO COLLEG. FIL.VALV.MANT.(A)	FILTER-VMP TUBE CONNECTION MCH13/16
4	1	13-00-0025E	RACCORDO 1/4 G -TUBO 6MM DIRITTO ERMETO	FITTING 1/4 G -TUBO 6MM ERMETO
5	1	GUAR1319	RONDELLA 1/4 IN RAME	COPPER WASHER 1/4
6	3	36-07-006	VITE TCEI M3X10 INOX MCH36	SCREW TCEI M3X10 INOX MCH36
7	1	13-00-0025	RACCORDO 1/4 NPT -TUBO 6MM DIRITTO 7/16	STRAIGHT FITTING 1/4 TUBE 6MM 7/16
8	1	13-00-0025	RACCORDO 1/4NPT - 7/16 TUBO6	FITTING 1/4NPT - 7/16 PIPE6
9	2	13-00-0137	DADO ZINCATO AUTOBLOC. M6 ALTO	SELF LOCKING NUT M6 HIGH
10	4	RON6I	RONDELLA PIANA M6 INOX DIN125	FLAT WASHER M6 INOX DIN125
11	2	VITE0645I	VITE T.C.E. INOX 6X45	SCREW T.C.E. INOX 6X45
12	1	13-04-0217	BLOCCHETTO ALLUMINIO RAMPA DI RICARICA	RECHARGE ALUMINIUM BLOCK
13	1	13-04-0285/AIR	TUBO HP R8 800MM AIR	HP R8 800MM AIR TUBE
14	1	13-00-0144	RACCORDO 90° 1/8 - 7/16 TUBO 6MM	FITTING 90° 1/8 - TUBO 6MM
15	2	36-07-008	RACCORDO 90° 1/4NPT - 7/16 TUBO6	FITTING 90° 1/4NPT - 7/16 PIPE6
16	1	13-04-0213	MICROTUBO 1/4-7/16 400MM	MICRO-HOSE 1/4-7/16 400MM
17	1	13-04-0211	MANOMETRO 0-500BAR CON FLANGIA	MANOMETER 0-500BAR W/FLANGE
18	2	6-00-028	TAPPO SCARICO OLIO MCH-6	DISCHARGE OIL PLUG
19	1	13-00-0084	VITE 6X15 T.C.E. ZINC.	SCREW 6X15 T.C.E. ZINC.
20	3	DA003I	DADO INOX AUTOBLOC. M3	SELF LOCKING NUT M3 INOX

CIRCUITO DI FILTRAZIONE - FILTERING CIRCUIT
Mod: Tech

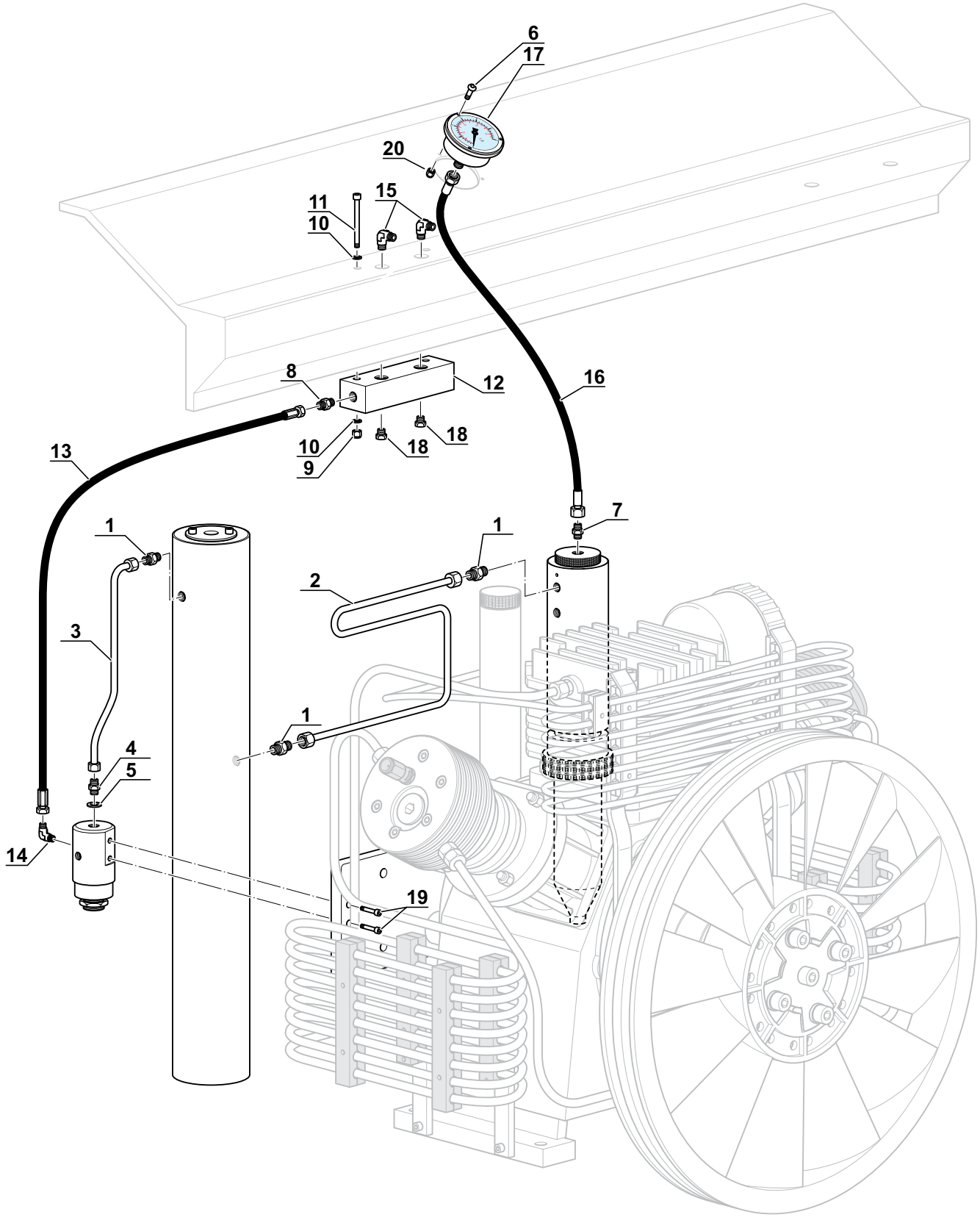

CIRCUITO DI FILTRAZIONE - FILTERING CIRCUIT

Mod: Compact

Rif. Pos.	Q.tà Q.ty	Codice Code	Descrizione	Description
1	3	13-00-0174E	RACCORDO 1/8 NPT TUBO 6MM	FITTING 1/8 NPT TUBE 6 MM
2	1	TUBO/MCH13/B/N/P	TUBO COLLEGAM. FILTRO/SEP. (B)	SEPARATOR-FILTER TUBE CONNECTION13/16
3	1	13-04-0320/P	TUBO COLLEG. FIL.VALV.MANT.(A)	FILTER-VMP TUBE CONNECTION MCH13/16
4	1	13-00-0025E	RACCORDO 1/4 G -TUBO 6MM DIRITTO ERMETO	FITTING 1/4 G -TUBO 6MM ERMETO
5	1	GUAR1319	RONDELLA 1/4 IN RAME	COPPER WASHER 1/4
6	1	13-00-0084	VITE 6X15 T.C.E. ZINC.	SCREW 6X15 T.C.E. ZINC.
7	1	13-00-0025	RACCORDO 1/4 NPT -TUBO 6MM DIRITTO 7/16	STRAIGHT FITTING 1/4 TUBE 6MM 7/16
8	2	13-00-0025	RACCORDO 1/4NPT - 7/16 TUBO6	FITTING 1/4NPT - 7/16 PIPE6
9	2	13-00-0137	DADO ZINCATO AUTOBLOC. M6 ALTO	SELF LOCKING NUT M6 HIGH
10	4	RON6I	RONDELLA PIANA M6 INOX DIN125	FLAT WASHER M6 INOX DIN125
11	2	VITE0645I	VITE T.C.E. INOX 6X45	SCREW T.C.E. INOX 6X45
12	1	13-04-0217	BLOCCHETTO ALLUMINIO RAMPA DI RICARICA	RECHARGE ALUMINIUM BLOCK
13	1	13-04-0285/AIR	TUBO HP R8 800MM AIR	HP R8 800MM AIR TUBE
14	1	13-00-0144	RACCORDO 90° 1/8 - 7/16 TUBO 6MM	FITTING 90° 1/8 - TUBO 6MM
15	2	36-07-008	RACCORDO 90° 1/4NPT - 7/16 TUBO6	FITTING 90° 1/4NPT - 7/16 PIPE6
16	1	13-04-0213	MICROTUBO 1/4-7/16 400MM	MICRO-HOSE 1/4-7/16 400MM
17	1	13-04-0211	MANOMETRO 0-500BAR CON FLANGIA	MANOMETER 0-500BAR W/FLANGE
18	3	36-07-006	VITE TCEI M3X10 INOX MCH36	SCREW TCEI M3X10 INOX MCH36
19	3	DA003I	DADO INOX AUTOBLOC. M3	SELF LOCKING NUT M3 INOX
20	1	6-00-028	TAPPO SCARICO OLIO MCH-6	DISCHARGE OIL PLUG
21	1	36-05-00240	MICROTUBO 1/4-7/16 L.300 MM	MICRO-HOSE 1/4-7/16 300MM
22	1	SC000315	PRESSOSTATO CON MICRO 330BAR	PRESSURE SWITCH MICRO 330BAR

CIRCUITO DI FILTRAZIONE - FILTERING CIRCUIT
Mod: Compact

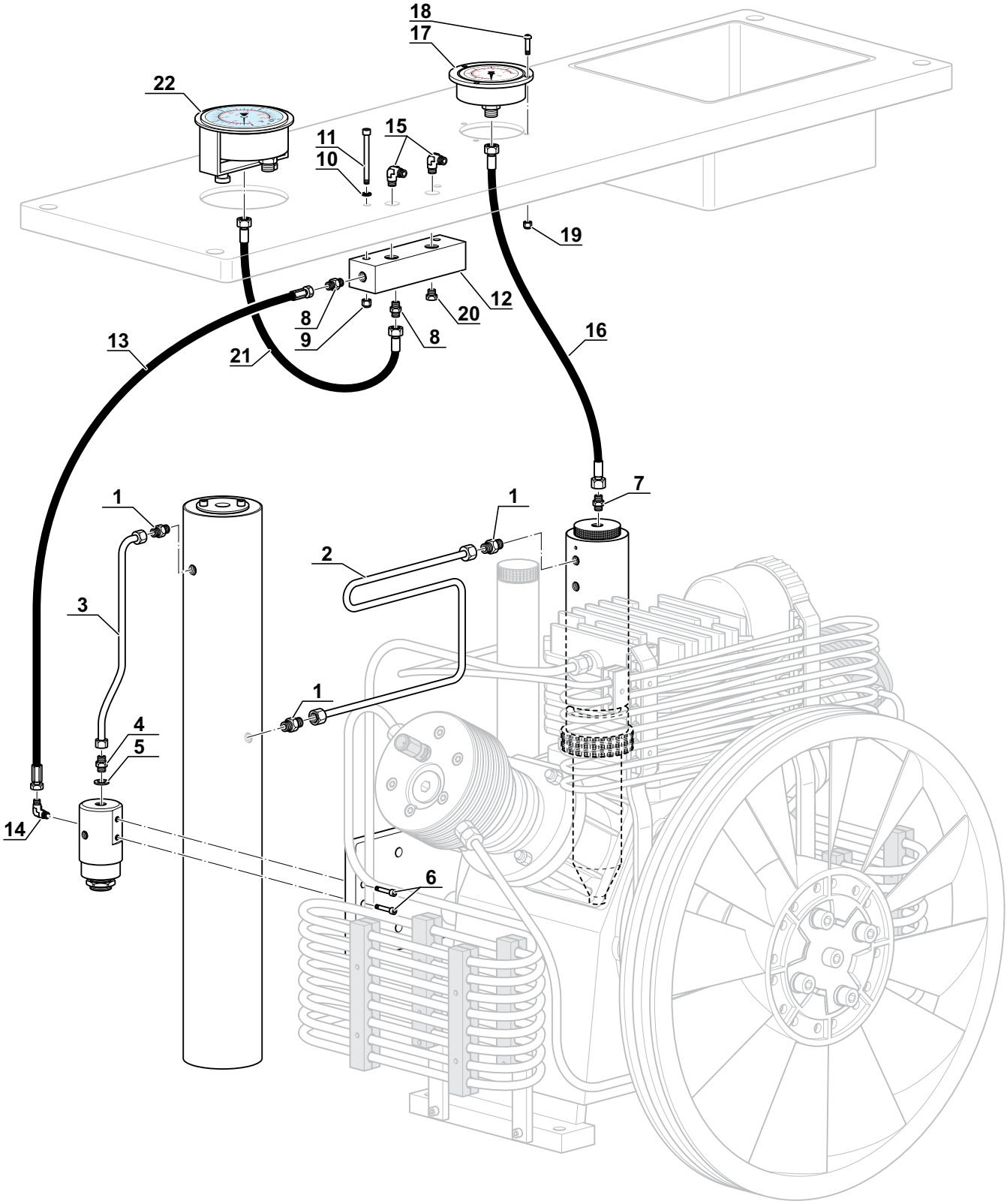

CIRCUITO DI FILTRAZIONE - FILTERING CIRCUIT

Mod: Compact Evo

Rif. Pos.	Q.tà Q.ty	Codice Code	Descrizione	Description
1	3	13-00-0174E	RACCORDO 1/8 NPT TUBO 6MM	FITTING 1/8 NPT TUBE 6 MM
2	1	TUBO/MCH13/B/N/P	TUBO COLLEGAM. FILTRO/SEP. (B)	SEPARATOR-FILTER TUBE CONNECTION13/16
3	1	13-04-0320/P	TUBO COLLEG. FIL.VALV.MANT.(A)	FILTER-VMP TUBE CONNECTION MCH13/16
4	1	13-00-0025E	RACCORDO 1/4 G -TUBO 6MM DIRITTO ERMETO	FITTING 1/4 G -TUBO 6MM ERMETO
5	1	GUAR1319	RONDELLA 1/4 IN RAME	COPPER WASHER 1/4
6	2	13-00-0084	VITE 6X15 T.C.E. ZINC.	SCREW 6X15 T.C.E. ZINC.
7	1	13-00-0025	RACCORDO 1/4 NPT -TUBO 6MM DIRITTO 7/16	STRAIGHT FITTING 1/4 TUBE 6MM 7/16
8	2	13-00-0025	RACCORDO 1/4NPT - 7/16 TUBO6	FITTING 1/4NPT - 7/16 PIPE6
9	2	13-00-0137	DADO ZINCATO AUTOBLOC. M6 ALTO	SELF LOCKING NUT M6 HIGH
10	4	RON6I	RONDELLA PIANA M6 INOX DIN125	FLAT WASHER M6 INOX DIN125
11	2	VITE0645I	VITE T.C.E. INOX 6X45	SCREW T.C.E. INOX 6X45
12	1	13-04-0217	BLOCCHETTO ALLUMINIO RAMPA DI RICARICA	RECHARGE ALUMINIUM BLOCK
13	1	13-04-0285/AIR	TUBO HP R8 800MM AIR	HP R8 800MM AIR TUBE
14	1	13-00-0144	RACCORDO 90° 1/8 - 7/16 TUBO 6MM	FITTING 90° 1/8 - TUBO 6MM
15	2	36-07-008	RACCORDO 90° 1/4NPT - 7/16 TUBO6	FITTING 90° 1/4NPT - 7/16 PIPE6
16	1	13-04-0213	MICROTUBO 1/4-7/16 400MM	MICRO-HOSE 1/4-7/16 400MM
17	1	13-04-0211	MANOMETRO 0-500BAR CON FLANGIA	MANOMETER 0-500BAR W/FLANGE
18	3	36-07-006	VITE TCEI M3X10 INOX MCH36	SCREW TCEI M3X10 INOX MCH36
19	9	DA003I	DADO INOX AUTOBLOC. M3	SELF LOCKING NUT M3 INOX
20	1	36-05-00240	MICROTUBO 1/4-7/16 L.300 MM	MICRO-HOSE 1/4-7/16 300MM
21	1	SC000315	PRESSOSTATO CON MICRO 330BAR	PRESSURE SWITCH MICRO 330BAR
22	1	13-04-0214	MICROTUBO 1/4-7/16 600MM	MICRO-HOSE 1/4-7/16 600MM
23	1	RACC/E2L31C08	RACC. 90° MASCHIO GIREVOLE CONICO 1/8 M TUBO 6	TURNING FITTING 90° WITH OR 1/8 TUBE 6
24	0,4	TUBRILSAN6X4/N	TUBO RILSAN NERO 6X4 PER ALTE TEMPERATURE	BLACK RILSAN HOSE 6X4 HIGHT TEMPERATURE
25	1	RACC/E2L35F08	RACC. T FEMMINA GIREVOLE E2L35F08 1/4 F TUBO 6	T FITTING 1/4 F TUBE 6
26	1	6-00-028	TAPPO SCARICO OLIO MCH-6	DISCHARGE OIL PLUG
27	1	13-05-0120	MAN.0-16 BAR/PSI CON FLANGIA	FLANGED PRESSURE GAUGE 0-16 BAR/PSI
28	1	13-05-0130	MAN.0-100 BAR/PSI CON FLANGIA	FLANGED PRESSURE GAUGE 0-100 BAR/PSI

CIRCUITO DI FILTRAZIONE - FILTERING CIRCUIT
Mod: Compact Evo

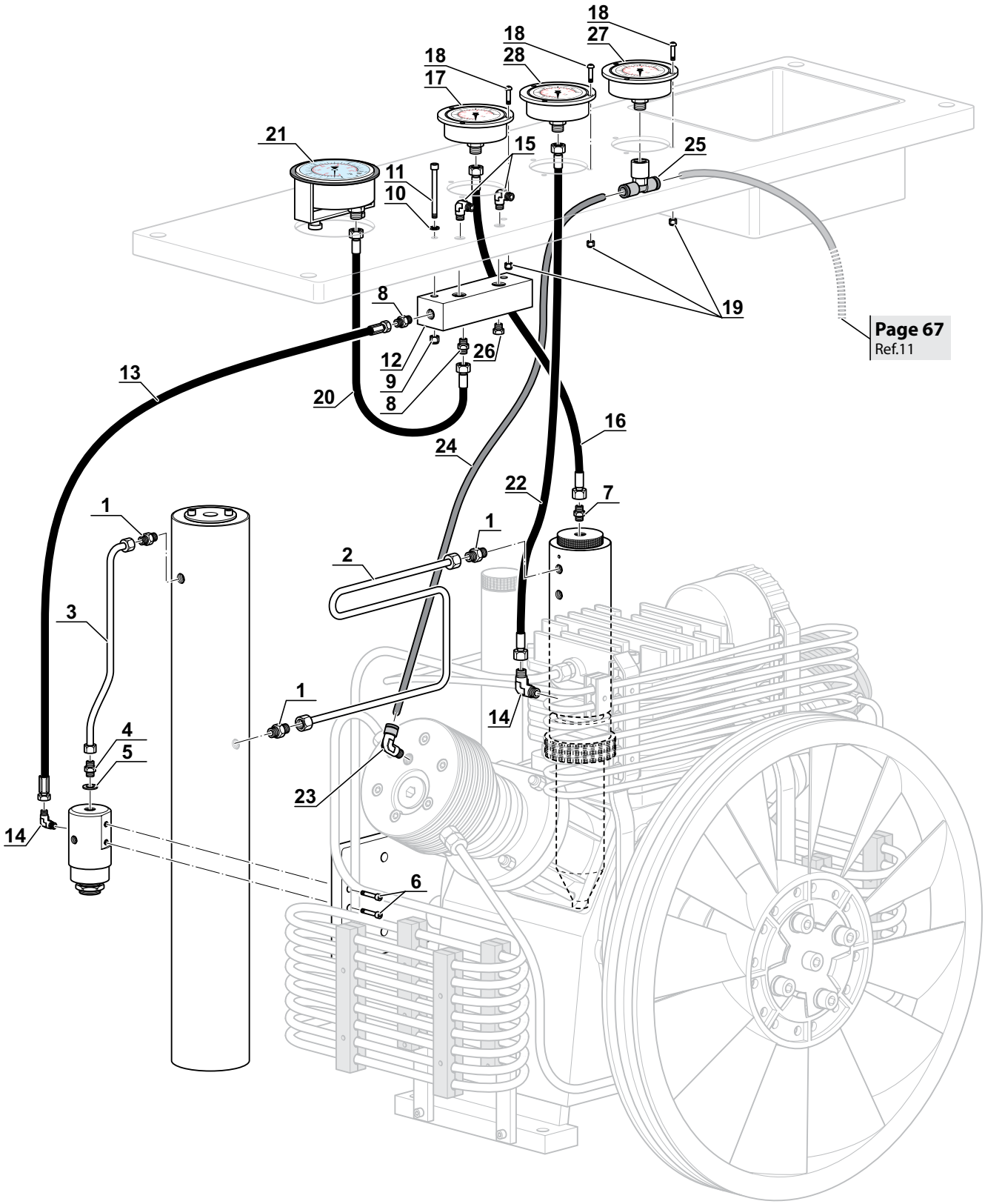

Page 67
Ref.11

CIRCUITO DI FILTRAZIONE - FILTERING CIRCUIT

Mod: Mini Silent

Rif. Pos.	Q.tà Q.ty	Codice Code	Descrizione	Description
1	1	13-00-0174	RACC. 1/8 NPT 7/16 TUBO 6 MM	STRAIGHT 1/8 PIPE FITTING 6
2	2	36-07-008	RACCORDO 90° 1/4NPT - 7/16	FITTING 90° 1/4NPT - 7/16
3	1	13-00-0144	RACCORDO 90° 1/8 - 7/16 TUBO 6MM	FITTING 90° 1/8 - TUBO 6MM
4	2	13-04-0500	MICROTUBO 1/4-7/16 250MM	MICRO-HOSE 1/4-7/16 250MM
5	1	13-04-0284/AIR	TUBO HP 600MM AIR	HP 600MM AIR TUBE
6	1	13-04-0217	BLOCCHETTO ALLUMINIO RAMPA DI RICARICA	RECHARGE ALUMINIUM BLOCK
7	1	13-04-0211	MANOMETRO 0-500BAR CON FLANGIA	MANOMETER 0-500BAR W/FLANGE
8	3	36-07-006	VITE TCEI M3X10 INOX MCH36	SCREW TCEI M3X10 INOX MCH36
9	3	DA003I	DADO INOX AUTOBLOC. M3	SELF LOCKING NUT M3 INOX
10	1	SC000315	PRESSOSTATO CON MICRO 330BAR	PRESSURE SWITCH MICRO 330BAR
11	2	13-00-0137	DADO ZINCATO AUTOBLOC. M6 ALTO	SELF LOCKING NUT M6 HIGH
12	4	RON6I	RONDELLA PIANA M6 INOX DIN125	FLAT WASHER M6 INOX DIN125
13	2	VITE0645I	VITE T.C.E. INOX 6X45	SCREW T.C.E. INOX 6X45
14	1	13-04-0327/AIR	TUBO HP 700MM AIR	HP 700MM AIR HOSE
15	2	13-00-0093	STAFFA PORTAFILTRO MCH13-16	FILTER HOLDING BRACKET MCH13/16
16	4	13-00-0101	DADO ZINCATO AUTOBLOC. M8 ALTO	8MM SELF-LOCKING NUT
17	1	6-05-015H	RACCORDO 1/8'NPT M12 PASSO 1,25	FITTING 1/8'NPT M12 PASSO 1,25
18	4	13-00-0025	RACCORDO 1/4NPT - 7/16 TUBO6	FITTING 1/4NPT - 7/16 PIPE6
19	1	6-00-028	TAPPO SCARICO OLIO MCH-6	DISCHARGE OIL PLUG
20	2	13-05-0610	STAFFA FISSAGGIO MAXIFILTER	MAXIFILTER BRACKET

CIRCUITO DI FILTRAZIONE - FILTERING CIRCUIT
Mod: Mini Silent

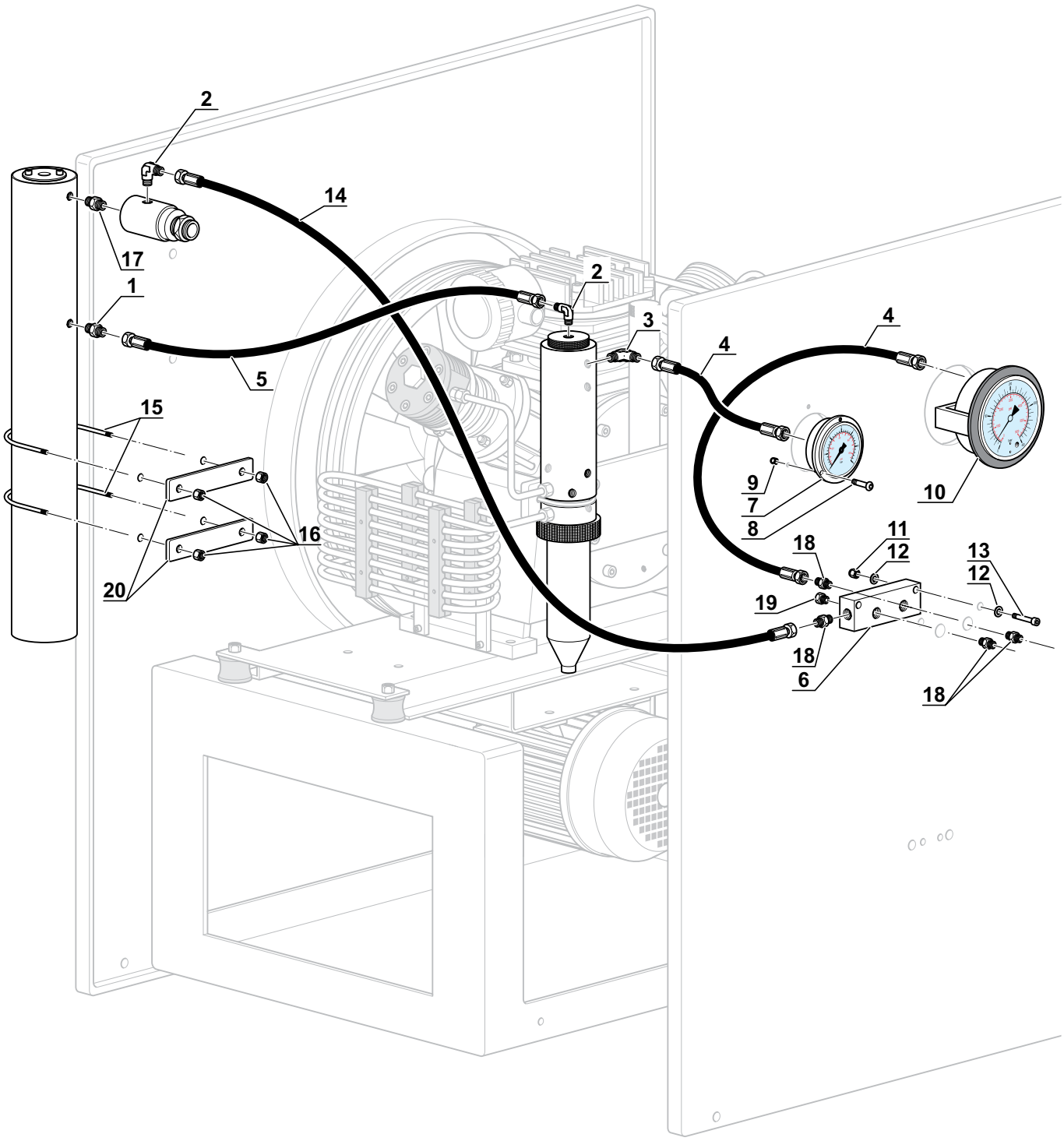

CIRCUITO DI FILTRAZIONE - FILTERING CIRCUIT

Mod: Mini Silent Evo

Rif. Pos.	Q.tà Q.ty	Codice Code	Descrizione	Description
1	1	13-00-0174	RACC. 1/8 NPT 7/16 TUBO 6 MM	STRAIGHT 1/8 PIPE FITTING 6
2	2	36-07-008	RACCORDO 90° 1/4NPT - 7/16	FITTING 90° 1/4NPT - 7/16
3	2	13-00-0144	RACCORDO 90° 1/8 - 7/16 TUBO 6MM	FITTING 90° 1/8 - TUBO 6MM
4	3	13-04-0500	MICROTUBO 1/4-7/16 250MM	MICRO-HOSE 1/4-7/16 250MM
5	1	13-04-0284/AIR	TUBO HP 600MM AIR	HP 600MM AIR TUBE
6	1	13-04-0217	BLOCCHETTO ALLUMINIO RAMPA DI RICARICA	RECHARGE ALUMINIUM BLOCK
7	1	13-04-0211	MANOMETRO 0-500BAR CON FLANGIA	MANOMETER 0-500BAR W/FLANGE
8	3	36-07-006	VITE TCEI M3X10 INOX MCH36	SCREW TCEI M3X10 INOX MCH36
9	3	DA003I	DADO INOX AUTOBLOC. M3	SELF LOCKING NUT M3 INOX
10	1	SC000315	PRESSOSTATO CON MICRO 330BAR	PRESSURE SWITCH MICRO 330BAR
11	2	13-00-0137	DADO ZINCATO AUTOBLOC. M6 ALTO	SELF LOCKING NUT M6 HIGH
12	4	RON6I	RONDELLA PIANA M6 INOX DIN125	FLAT WASHER M6 INOX DIN125
13	2	VITE0645I	VITE T.C.E. INOX 6X45	SCREW T.C.E. INOX 6X45
14	1	13-04-0327/AIR	TUBO HP 700MM AIR	HP 700MM AIR HOSE
15	2	13-00-0093	STAFFA PORTAFILTRO MCH13-16	FILTER HOLDING BRACKET MCH13/16
16	4	13-00-0101	DADO ZINCATO AUTOBLOC. M8 ALTO	8MM SELF-LOCKING NUT
17	1	6-05-015H	RACCORDO 1/8'NPT M12 PASSO 1,25	FITTING 1/8'NPT M12 PASSO 1,25
18	4	13-00-0025	RACCORDO 1/4NPT - 7/16 TUBO6	FITTING 1/4NPT - 7/16 PIPE6
19	1	6-00-028	TAPPO SCARICO OLIO MCH-6	DISCHARGE OIL PLUG
20	2	13-05-0610	STAFFA FISSAGGIO MAXIFILTER	MAXIFILTER BRACKET
21	1	13-05-0130	MAN.0-100 BAR/PSI CON FLANGIA	FLANGED PRESSURE GAUGE 0-100 BAR/PSI
22	1	13-05-0120	MAN.0-16 BAR/PSI CON FLANGIA	FLANGED PRESSURE GAUGE 0-16 BAR/PSI
23	1	RACC/E2L31C08	RACC. 90° MASCHIO GIREVOLE CONICO 1/8 M TUBO 6	TURNING FITTING 90° WITH OR 1/8 TUBE 6
24	0,5	TUBRILSAN6X4/N	TUBO RILSAN NERO 6X4 PER ALTE TEMPERATURE	BLACK RILSAN HOSE 6X4 HIGHT TEMPERATURE
25	1	RACC/E2L35F08	RACC. T FEMMINA GIREVOLE E2L35F08 1/4 F TUBO 6	T FITTING 1/4 F TUBE 6

CIRCUITO DI FILTRAZIONE - FILTERING CIRCUIT

Mod: Mini Silent Evo

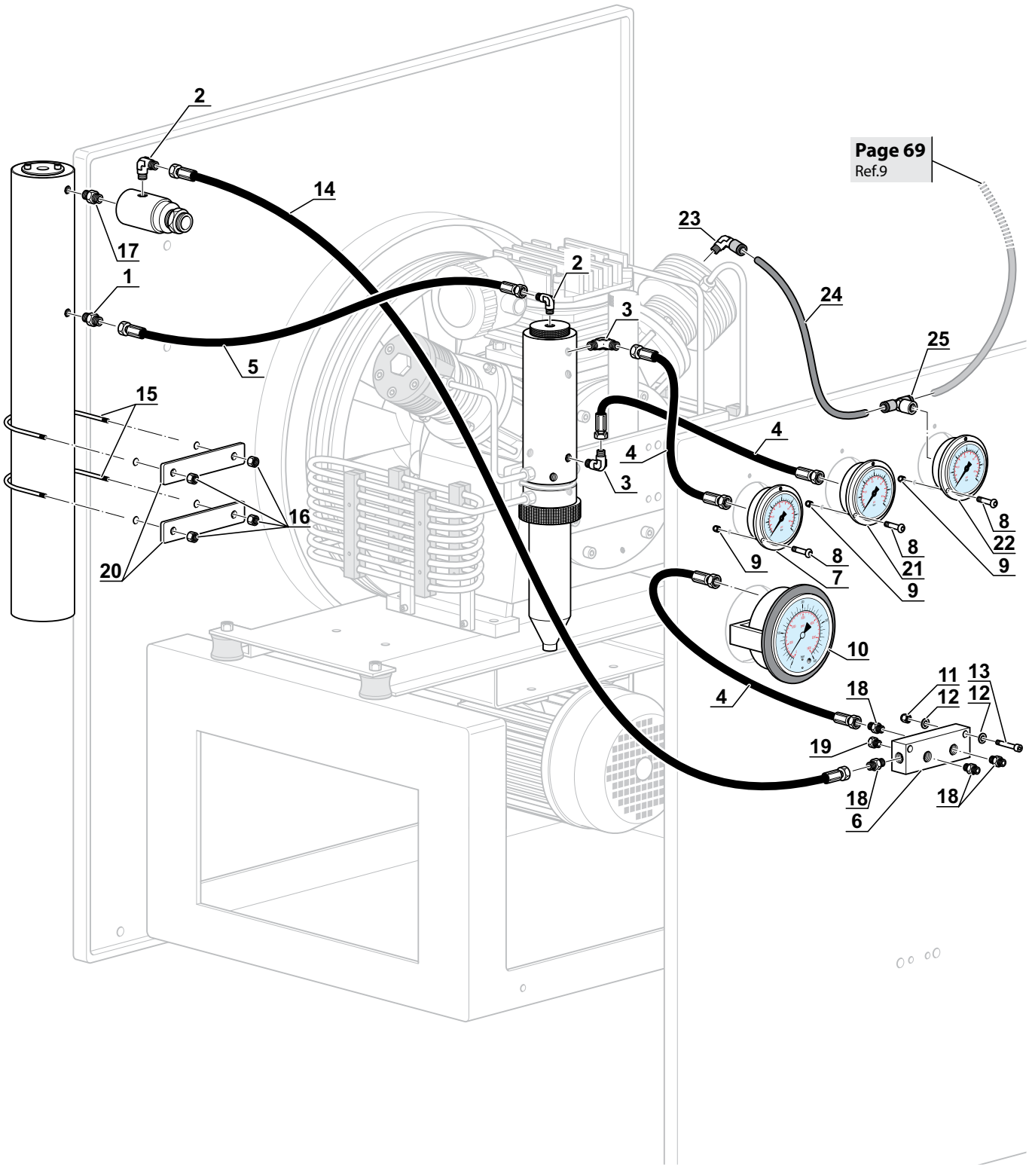

CIRCUITO DI FILTRAZIONE - FILTERING CIRCUIT

Mod: Super Silent Evo

Rif. Pos.	Q.tà Q.ty	Codice Code	Descrizione	Description
1	3	13-00-0174E	RACC. 1/8 NPT 7/16 TUBO 6 MM	STRAIGHT 1/8 PIPE FITTING 6
2	1	13-00-0144	RACCORDO 90° 1/8 - 7/16 TUBO 6MM	FITTING 90° 1/8 - TUBO 6MM
3	1	RACC/E2L31C08	RACC. 90° MASCHIO GIREVOLE CONICO 1/8 M TUBO 6	TURNING FITTING 90° WITH OR 1/8 TUBE 6
4	1	13-04-0213	MICROTUBO 1/4-7/16 400MM	MICRO-HOSE 1/4-7/16 400MM
5	1	36-05-00200	MICROTUBO 1/4-7/16 800MM	MICRO-HOSE 1/4-7/16 800MM MANOMETER HOLDER
6	1	13-04/0288/SS/P	TUBO HP 500MM	HP HOSE 500MM
7	0,5	TUBRILSAN6X4/N	TUBO RILSAN NERO 6X4 PER ALTE TEMPERATURE	BLACK RILSAN HOSE 6X4 HIGHT TEMPERATURE
8	1	RACC/E2L35F08	RACC. T FEMMINA GIREVOLE E2L35F08 1/4 F TUBO 6	T FITTING 1/4 F TUBE 6
9	1	13-04-0217	BLOCCHETTO ALLUMINIO RAMPA DI RICARICA	RECHARGE ALUMINIUM BLOCK
10	1	36-05-00240	MICROTUBO 1/4-7/16 L.300 MM	MICRO-HOSE 1/4-7/16 300MM
11	1	13-00-0037/P	TUBO INOX DIAM.6X1 TELAIO MCH13TELAIO	INOX PIPE D6X1 FRAME MCH13
12	1	13-00-0025	RACCORDO 1/4 NPT -TUBO 6MM 7/16	STRAIGHT FITTING 1/4 TUBE 6MM 7/16
13	1	36-07-053	RACCORDO 1/4 NPT - 1/4 NPT	FITTING 1/4 NPT - 1/4 NPT
14	1	13-05-0120	MAN.0-16 BAR/PSI CON FLANGIA	FLANGED PRESSURE GAUGE 0-16 BAR/PSI
15	1	13-05-0130	MAN.0-100 BAR/PSI CON FLANGIA	FLANGED PRESSURE GAUGE 0-100 BAR/PSI
16	1	13-04-0211	MANOMETRO 0-500BAR CON FLANGIA	MANOMETER 0-500BAR W/FLANGE
17	1	SC000315	PRESSOSTATO CON MICRO 330BAR	PRESSURE SWITCH MICRO 330BAR
18	4	13-00-0101	DADO ZINCATO AUTOBLOC. M8 ALTO	8MM SELF-LOCKING NUT
19	2	13-00-0093	STAFFA PORTAFILTRO MCH13-16	FILTER HOLDING BRACKET MCH13/16
20	9	36-07-006	VITE TCEI M3X10 INOX MCH36	SCREW TCEI M3X10 INOX MCH36
21	9	DA003I	DADO INOX AUTOBLOC. M3	SELF LOCKING NUT M3 INOX
22	2	13-00-0137	DADO ZINCATO AUTOBLOC. M6 ALTO	SELF LOCKING NUT M6 HIGH
23	4	RON6I	RONDELLA PIANA M6 INOX DIN125	FLAT WASHER M6 INOX DIN125
24	2	VITE0645I	VITE T.C.E. INOX 6X45	SCREW T.C.E. INOX 6X45
25	3	13-00-0025	RACCORDO 1/4NPT - 7/16 TUBO6	FITTING 1/4NPT - 7/16 PIPE6
26	1	6-00-028	TAPPO SCARICO OLIO MCH-6	DISCHARGE OIL PLUG
27	2	13-05-0610	STAFFA FISSAGGIO MAXIFILTER	MAXIFILTER BRACKET
28	1	13-00-0025E	RACCORDO 1/4 G -TUBO 6MM DIRITTO ERMETO	FITTING 1/4 G -PIPE 6MM ERMETO

CIRCUITO DI FILTRAZIONE - FILTERING CIRCUIT
Mod: Super Silent Evo

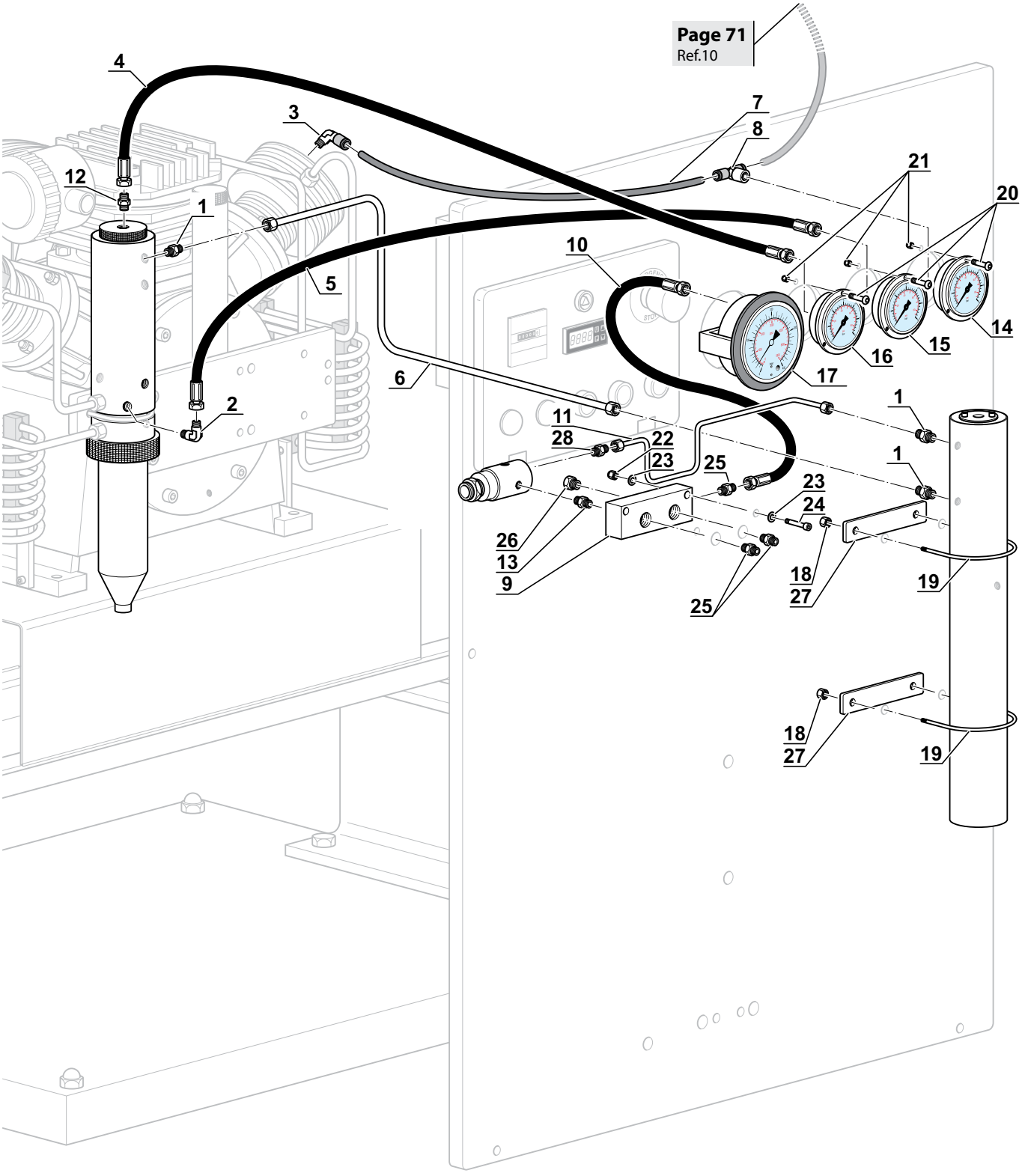

CIRCUITO DI FILTRAZIONE - FILTERING CIRCUIT

Mod: MCH-26-32/ET Compact

Rif. Pos.	Q.tà Q.ty	Codice Code	Descrizione	Description
1	6	13-00-0174	RACC. 1/8 NPT 7/16 TUBO 6 MM	STRAIGHT 1/8 PIPE FITTING 6
2	2	13-04-0217	BLOCCHETTO ALLUMINIO RAMPA DI RICARICA	RECHARGE ALUMINIUM BLOCK
3	4	13-00-0137	DADO ZINCATO AUTOBLOC. M6 ALTO	SELF LOCKING NUT M6 HIGH
4	8	RON6I	RONDELLA PIANA M6 INOX DIN125	FLAT WASHER M6 INOX DIN125
5	4	VITE0645I	VITE T.C.E. INOX 6X45	SCREW T.C.E. INOX 6X45
6	2	6-02-011	RACCORDO CILINDRO 2° STADIO	ELBOW CYLINDER 2°ND STAGE
7	2	36-07-053	RACCORDO MM 1/4 NPT - 1/4 NPT	1/4 NPT - 1/4 NPT FITTING
8	2	36-07-008	RACCORDO 90° 1/4NPT - 7/16	FITTING 90° 1/4NPT - 7/16
9	2	36-07-008	RACCORDO 90° 1/4NPT - 7/16 TUBO6	FITTING 90° 1/4NPT - 7/16 PIPE6
10	1	SC000315	PRESSOSTATO CON MICRO 330BAR	PRESSURE SWITCH MICRO 330BAR
11	1	13-04-0211	MANOMETRO 0-500BAR CON FLANGIA	MANOMETER 0-500BAR W/FLANGE
12	3	36-07-006	VITE TCEI M3X10 INOX MCH36	SCREW TCEI M3X10 INOX MCH36
13	3	DA003I	DADO INOX AUTOBLOC. M3	SELF LOCKING NUT M3 INOX
14	8	13-00-0101	DADO ZINCATO AUTOBLOC. M8 ALTO	8MM SELF-LOCKING NUT
15	2	13-00-0093	STAFFA PORTAFILTRO MCH13-16	FILTER HOLDING BRACKET MCH13/16
16	3	13-04-0226	TUBO HP 300MM	HP 300MM HOSE
17	1	13-04-0199/AIR	TUBO HP R8 900MM AIR	HP R8 900MM AIR HOSE
18	1	13-04-0285/AIR	TUBO HP R8 800MM AIR	HP R8 800MM AIR HOSE
19	1	36-05-00240	MICROTUBO 1/4-7/16 L.300 MM	MICRO-HOSE 1/4-7/16 300MM
20	1	13-04-0213	MICROTUBO 1/4-7/16 400MM	MICRO-HOSE 1/4-7/16 400MM
21	6	13-00-0025	RACCORDO 1/4NPT - 7/16 TUBO6	FITTING 1/4NPT - 7/16 PIPE6
22	2	6-00-028	TAPPO SCARICO OLIO MCH-6	DISCHARGE OIL PLUG
23	4	13-05-0610	STAFFA FISSAGGIO MAXIFILTER	MAXIFILTER BRACKET

CIRCUITO DI FILTRAZIONE - FILTERING CIRCUIT

Mod: MCH-26-32/ET Compact

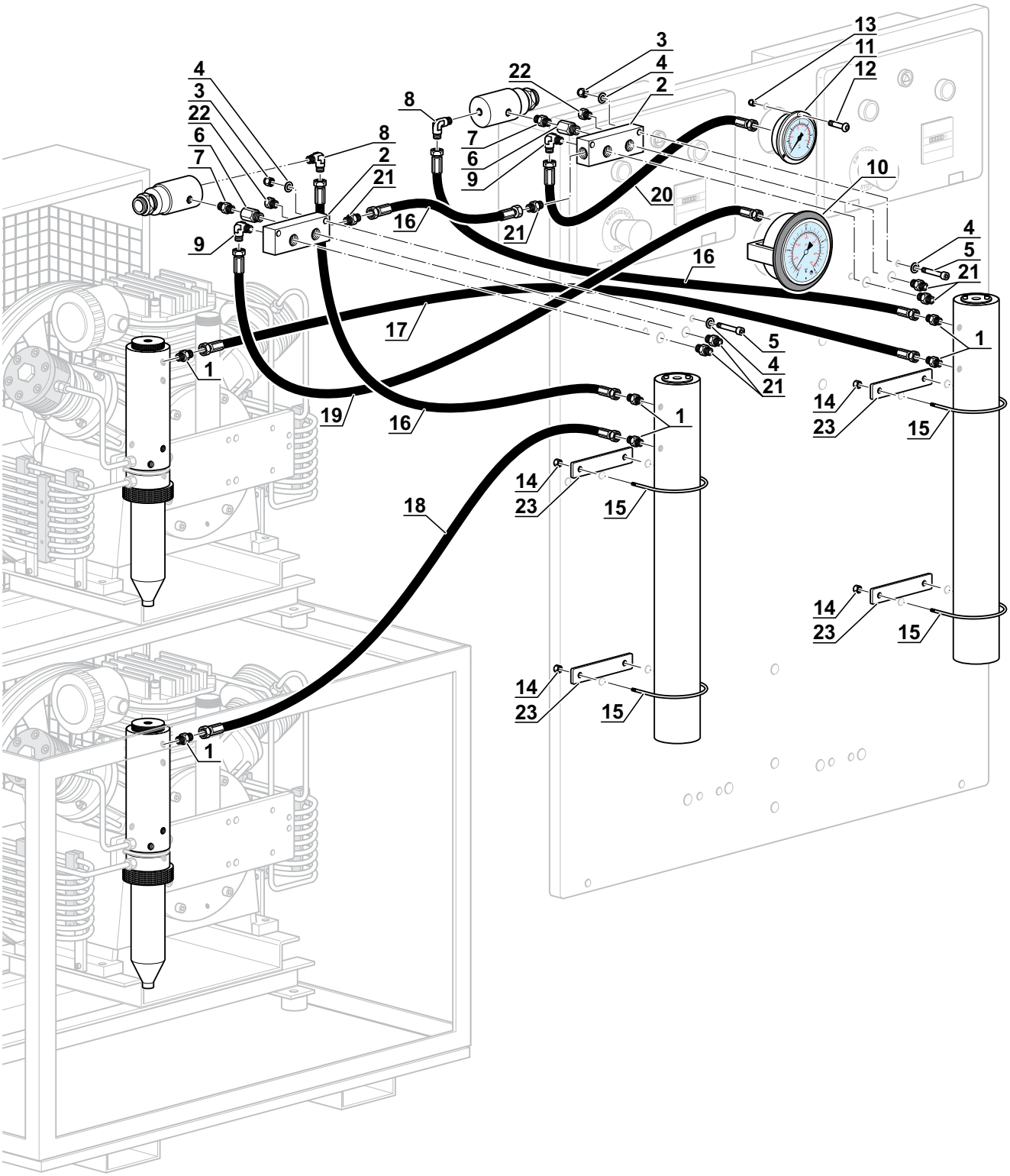

CIRCUITO DI FILTRAZIONE - FILTERING CIRCUIT

Mod: Super Silent Evo Tropical Plus

Rif. Pos.	Q.tà Q.ty	Codice Code	Descrizione	Description
KIT1	1	13-10-0001/TP/R	KIT RACCORDI 1/4 COLLEGAMENTO 2 HYYPERFILTER	KIT FITTINGS 1/4 CONNECTION 2 HYYPERFILTER
1.1	1		RACCORDO ERMETO 1/4 - TUBO Ø8	FITTING ERMETO 1/4 - TUBE Ø8
1.2	1		DADO PER RACCORDO ERMETO TUBO Ø8	NUT FOR FITTING ERMETO TUBE Ø8
1.3	1		ANELLO OGIVA Ø8M	OGIVE RING Ø8M
1.4	1		RACCORDO ERMETO G1/4-M14X1.5	FITTING ERMETO G1/4-M14X1.5
1.5	2		RONDELLA 1/4 IN RAME	COPPER WASHER 1/4
2	1	13-00-0162	NYLON SCARICO CONDENSA	CONDENSATE DISCHARGE NYLON
3	1	13-00-0161/R	KIT RUBINETTO SCARICO CONDENSA 1/8 NPT	CONDENSATE DISCHARGE BODY VALVE1/8 NPT KIT
4	1	13-04-0213	MICROTUBO 1/4-7/16 400MM	MICRO-HOSE 1/4-7/16 400MM
5	1	36-05-00200	MICROTUBO 1/4-7/16 800MM	MICRO-HOSE 1/4-7/16 800MM MANOMETER HOLDER
6	1	13-04-0327/AIR	TUBO HP 700MM AIR	HP 700MM AIR HOSE
7	0,5	TUBRILSAN6X4/N	TUBO RILSAN NERO 6X4 PER ALTE TEMPERATURE	BLACK RILSAN HOSE 6X4 HIGHT TEMPERATURE
8	1	RACC/E2L35F08	RACC. T FEMMINA GIREVOLE E2L35F08 1/4 F TUBO 6	T FITTING 1/4 F TUBE 6
9	1	13-04-0217	BLOCCHETTO ALLUMINIO RAMPA DI RICARICA	RECHARGE ALUMINIUM BLOCK
10	1	36-05-00240	MICROTUBO 1/4-7/16 L.300 MM	MICRO-HOSE 1/4-7/16 300MM
11	1	13-04-0284/AIR	TUBO HP 600MM AIR	HP 600MM AIR TUBE
12	1	13-00-0025	RACCORDO 1/4 NPT -TUBO 6MM DIRITTO 7/16	STRAIGHT FITTING 1/4 TUBE 6MM 7/16
13	1	36-07-053	RACCORDO MM 1/4 NPT - 1/4 NPT	1/4 NPT - 1/4 NPT FITTING
14	1	13-05-0120	MAN.0-16 BAR/PSI CON FLANGIA	FLANGED PRESSURE GAUGE 0-16 BAR/PSI
15	1	13-05-0130	MAN.0-100 BAR/PSI CON FLANGIA	FLANGED PRESSURE GAUGE 0-100 BAR/PSI
16	1	13-04-0211	MANOMETRO 0-500BAR CON FLANGIA	MANOMETER 0-500BAR W/FLANGE
17	1	SC000315	PRESSOSTATO CON MICRO 330BAR	PRESSURE SWITCH MICRO 330BAR
18	8	13-00-0101	DADO ZINCATO AUTOBLOC. M8 ALTO	8MM SELF-LOCKING NUT
19	4	SC000537	CAVALLOTTO PER PRESEC	HOLDING BRACKET PRESEC
20	9	36-07-006	VITE TCEI M3X10 INOX MCH36	SCREW TCEI M3X10 INOX MCH36
21	9	DA003I	DADO INOX AUTOBLOC. M3	SELF LOCKING NUT M3 INOX
22	2	13-00-0137	DADO ZINCATO AUTOBLOC. M6 ALTO	SELF LOCKING NUT M6 HIGH
23	4	RON6I	RONDELLA PIANA M6 INOX DIN125	FLAT WASHER M6 INOX DIN125
24	2	VITE0645I	VITE T.C.E. INOX 6X45	SCREW T.C.E. INOX 6X45
25	2	13-00-0125	RACCORDO DIRITTO 7/16UNF - 1/4GAS	FITTING 7/16UNF - 1/4GAS
26	2	36-07-057	RACCORDO 90° GIREVOLE 7/16M 7/16F	FITTING 90° REVOLVING 7/16M 7/16F
27	3	13-00-0025	RACCORDO 1/4NPT - 7/16 TUBO6	FITTING 1/4NPT - 7/16 PIPE6
28	1	6-00-028	TAPPO SCARICO OLIO MCH-6	DISCHARGE OIL PLUG
29	2	13-05-0611	STAFFA SUPPORTO HYPERFILTER MARK2	HYPERFILTER BRACKET MARK2
30	1	13-00-0174	RACC. 1/8 NPT 7/16 TUBO 6 MM	STRAIGHT 1/8 PIPE FITTING 6
31	1	13-00-0144	RACCORDO 90° 1/8 - 7/16 TUBO 6MM	FITTING 90° 1/8 - TUBO 6MM
32	1	RACC/E2L31C08	RACC. 90° MASCHIO GIREVOLE CONICO 1/8 M TUBO 6	TURNING FITTING 90° WITH OR 1/8 TUBE 6
33	1	RAC/1/4G-1/4G	RACC. DIRITTO M-M1/4G	STRAIGHT M-M1/4G
34	1	SC000492	VALVOLA DI NON RITORNO	CHECK VALVE
35	1	13-00-0027	RACCORDO M-M 1/4NPT-TUBO6 CON FORO 1/8"	FITTING M-M 1/4NPT-TUBE6 WITH HOLE 1/8"

CIRCUITO DI FILTRAZIONE - FILTERING CIRCUIT

Mod: Super Silent Evo Tropical Plus

Page 75
Ref.10

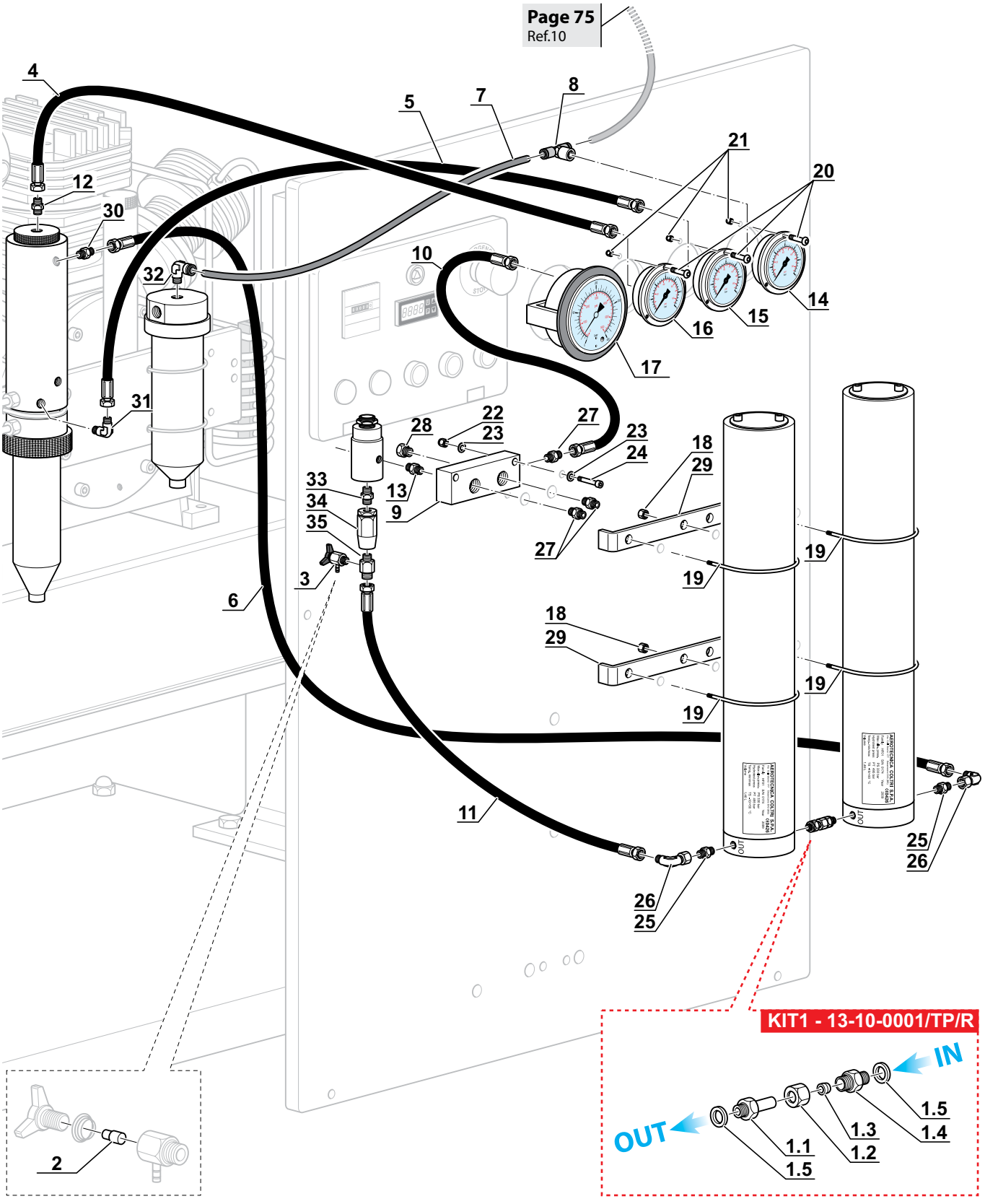

CIRCUITO DI FILTRAZIONE - FILTERING CIRCUIT

Mod: Mark2

Rif. Pos.	Q.tà Q.ty	Codice Code	Descrizione	Description
KIT1	1	13-10-0001/TP/R	KIT RACCORDI 1/4 COLLEGAMENTO 2 HYYPERFILTER	KIT FITTINGS 1/4 CONNECTION 2 HYYPERFILTER
1.1	1		RACCORDO ERMETO 1/4 - TUBO Ø8	FITTING ERMETO 1/4 - TUBE Ø8
1.2	1		DADO PER RACCORDO ERMETO TUBO Ø8	NUT FOR FITTING ERMETO TUBE Ø8
1.3	1		ANELLO OGIVA Ø8M	OGIVE RING Ø8M
1.4	1		RACCORDO ERMETO G1/4-M14X1.5	FITTING ERMETO G1/4-M14X1.5
1.5	2		RONDELLA 1/4 IN RAME	COPPER WASHER 1/4
2	1	13-00-0162	NYLON SCARICO CONDENSA	CONDENSATE DISCHARGE NYLON
3	1	SC000492	VALVOLA DI NON RITORNO	CHECK VALVE
4	9	36-07-006	VITE TCEI M3X10 INOX MCH36	SCREW TCEI M3X10 INOX MCH36
5	9	DA003I	DADO INOX AUTOBLOC. M3	SELF LOCKING NUT M3 INOX
6	1	13-04-0211	MANOMETRO 0-500BAR CON FLANGIA	MANOMETER 0-500BAR W/FLANGE
7	1	13-05-0130	MAN.0-100 BAR/PSI CON FLANGIA	FLANGED PRESSURE GAUGE 0-100 BAR/PSI
8	1	13-05-0120	MAN.0-16 BAR/PSI CON FLANGIA	FLANGED PRESSURE GAUGE 0-16 BAR/PSI
9	1	SC000315	PRESSOSTATO CON MICRO 330BAR	PRESSURE SWITCH MICRO 330BAR
10	2	VITE0645I	VITE T.C.E. INOX 6X45	SCREW T.C.E. INOX 6X45
11	2	RON6I	RONDELLA PIANA M6 INOX DIN125	FLAT WASHER M6 INOX DIN125
12	2	13-00-0137	DADO ZINCATO AUTOBLOC. M6 ALTO	SELF LOCKING NUT M6 HIGH
13	2	36-07-008	RACCORDO 90° 1/4NPT - 7/16 TUBO6	FITTING 90° 1/4NPT - 7/16 PIPE6
14	1	RAC/1/4G-1/4G	RACC. DIRITTO M-M1/4G	STRAIGHT M-M1/4G
15	1	13-04-0217	BLOCCHETTO ALLUMINIO RAMPA DI RICARICA	RECHARGE ALUMINIUM BLOCK
16	1	13-04-0225	RACCORDO M-M 1/4G-1/4NPT	FITTING M-M 1/4G-1/4NPT
17	1	RACC/E2L35F08	RACC. T FEMMINA GIREVOLE E2L35F08 1/4 F TUBO 6	T FITTING 1/4 F TUBE 6
18	1	13-00-0025	RACCORDO 1/4NPT - 7/16 TUBO6	FITTING 1/4NPT - 7/16 PIPE6
19	1	36-05-00240	MICROTUBO 1/4-7/16 L.300 MM	MICRO-HOSE 1/4-7/16 300MM
20	1	13-00-0027	RACCORDO M-M 1/4NPT-TUBO6 CON FORO 1/8"	FITTING M-M 1/4NPT-TUBE6 WITH HOLE 1/8"
21	1	13-04-0213	MICROTUBO 1/4-7/16 400MM	MICRO-HOSE 1/4-7/16 400MM
22	1	13-04-0214	MICROTUBO 1/4-7/16 600MM	MICRO-HOSE 1/4-7/16 600MM
23	1	13-00-0125	RACCORDO M-M 1/4GAS -TUBO6 7/16	FITTING 1/4GAS-TUBE6 7/16
24	1	16-02-001	RACCORDO M-M 1/4NPT-TUBO 6 ERMETO	FITTING M-M 1/4NPT-TUBE6 ERMETO
25	1	TUBRILSAN6X4/N	TUBO RILSAN NERO 6X4 PER ALTE TEMPERATURE	BLACK RILSAN HOSE 6X4 HIGHT TEMPERATURE
26	1	13-00-0144	RACCORDO 90° 1/8 - 7/16 TUBO 6MM	FITTING 90° 1/8 - TUBO 6MM
27	1	RACC/E2L31009	RACC. L MASCHIO GIREVOLE CONICO 1/4 M TUBO 6	TURNING FITTING 1/4M TUBE6
28	1	13-04-0200/SS/P	TUBO FE Ø6 VMP-HYPERFILTER MARK1-2	PIPE FE Ø6 VMP-HYPERFILTER MARK1-2
29	1	13-04-0199/SS/P	TUBO HP R8 900MM AIR	HP R8 900MM AIR HOSE
30	8	13-00-0101	DADO ZINCATO AUTOBLOC. M8 ALTO	8MM SELF-LOCKING NUT
31	2	13-05-0611	STAFFA INOX	INOX BRACKET
32	4	SC000537	CAVALLOTTO PER PRESEC	HOLDING BRACKET PRESEC
33	2	13-00-0125	RACCORDO DIRITTO 7/16UNF - 1/4GAS	FITTING 7/16UNF - 1/4GAS
34	2	36-07-057	RACCORDO 90° GIREVOLE 7/16M 7/16F	FITTING 90° REVOLVING 7/16M 7/16F
35	1	13-00-0161/R	KIT RUBINETTO SCARICO CONDENSA 1/8 NPT	CONDENSATE DISCHARGE BODY VALVE1/8 NPT KIT

CIRCUITO DI FILTRAZIONE - FILTERING CIRCUIT

Mod: Mark2

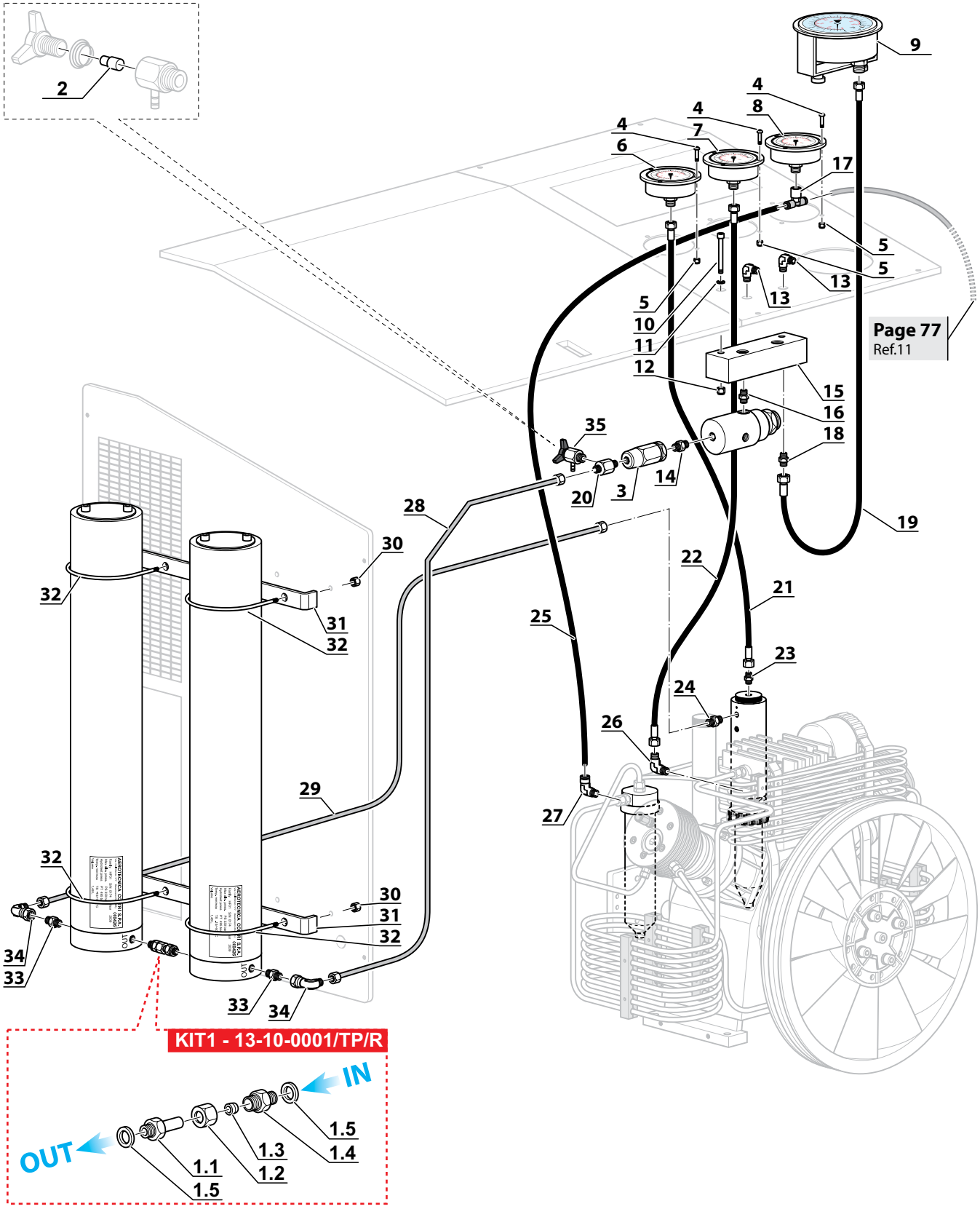

SCARICO CONDENSA - CONDENSATE DISCHARGE

Mod: Standard - Tech - MiniTech

Rif. Pos.	Q.tà Q.ty	Codice Code	Descrizione	Description
1	2	13-00-0161/R	KIT RUBINETTO SCARICO CONDENSA 1/8 NPT	CONDENSATE DISCHARGE BODY VALVE1/8 NPT KIT
2	1	13-00-0161-1/4G/R	KIT RUBINETTO SCARICO CONDENSA 1/4	CONDENSATE DISCHARGE BODY VALVE 1/4 KIT
3	3	13-00-0162	NYLON SCARICO CONDENSA	CONDENSATE DISCHARGE NYLON

SCARICO CONDENSA - CONDENSATE DISCHARGE
Mod: Standard - Tech - MiniTech

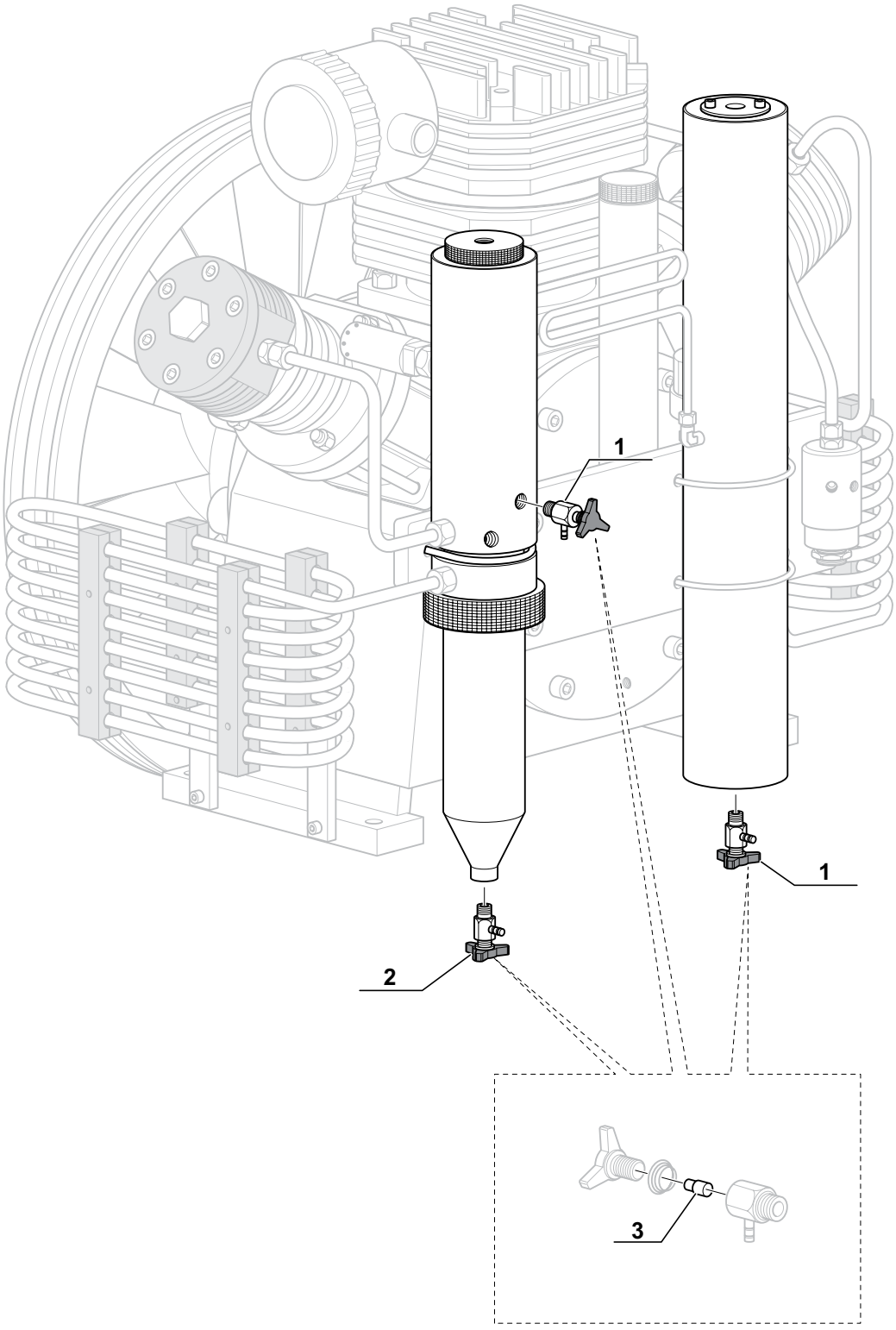

SCARICO CONDENSA - CONDENSATE DISCHARGE

Mod: Compact - Compact Evo

Rif. Pos.	Q.tà Q.ty	Codice Code	Descrizione	Description
KIT1	1	13-10-0002/R	KIT INIETTORI SCARICO CONDENSA	KIT INJECTORS CONDENSATE DRAIN
1.1	3		INIETTORE SCARICO CONDENSA	INJECTOR CONDENSATE DRAIN
1.2	3		O RING 2118 90SH (29.87X1.78)	O RING 2118 90SH (29.87X1.78)
1.3	3		O RING 2018 90SH (4,48X1,78)	O RING 2018 90SH (4,48X1,78)
1.4	3		O RING 2100 NBR 90SH	O RING 2100 NBR 90SH
1.5	3		O RING 114 90 SH	O RING 114 90 SH
KIT2	1	13-00-0505/COM/R	KIT BLOCCHETTO SCARICO CONDENSA COMPACT	COMPACT CONDENSATE DISCHARGE KIT
2.1	2		VITE T.C.E. INOX 6X45	SCREW T.C.E. INOX 6X45
2.2	1		RACC. DIRITTO M 1/8 NPT - M 1/8 NPT	STRAIGHT FITTING M 1/8 NPT - M 1/8 NPT
2.3	1	13-04-0221/N	ELETTR. LP SCAR. COND. 3VIE NC 1/8"NBR D.2 V.220/50-60	LP SOLENOID VALVE
2.4	1	13-00-0205	VALVOLA SICUREZZA 1° STADIO MCH-13-16 10BAR	1ST STAGE SAFETY VALVE MCH-13-16 10BAR
2.5	1		RACC. L MASCHIO GIREVOLE CONICO 1/8 M TUBO 6	TURNING FITTING 1/8M TUBE6
2.6	3		RACC. DIRITTO CILINDRICO MASCHIO CON OR 1/8	1/8 E2001007W FITTING WITH OR
2.7	3		RACC. 1/8 NPT - TUBO 6 MM ERMETO	STRAIGHT FITTING 1/8 NPT PIPE 6MM ERMETO
2.8	1		KIT BLOCCHETTO VALVOLA SCARICO CONDENSA	CONDENSATE DISCHARGE VALVE KIT
2.9	3		KIT RUBINETTO SCARICO CONDENSA 1/8 NPT	CONDENSATE DISCHARGE BODY VALVE1/8 NPT KIT
KIT3	1	SILENZ/2931-1/R	KIT SILENZIATORE PER TANICA 1 TUBO	KIT SILENCER FOR TANK 1 PIPE
3.1	1		SILENZIATORE 2931 3/8 F	2931 3/8 F SILENCER
3.2	1		RACCORDO 2553 1/8 3/8	2553 1/8 3/8 FITTING
3.3	1		RACC. DIRITTO MASCHIO CON OR 1/8M TUBO 6	FITTING WITH OR E2L01007 1/8M TUBE 6
KIT4	1	SILENZ/2931-2/R	KIT SILENZIATORE PER TANICA 2 TUBI	KIT SILENCER FOR TANK 2 PIPE
4.1	1		SILENZIATORE 2931 3/8 F	2931 3/8 F SILENCER
4.2	1		RACCORDO 2553 1/8 3/8	2553 1/8 3/8 FITTING
4.3	1		RACCORDO Y MASCHIO 2 X TUBO 6 1 1/8G	FITTING E2L26006 Y 2 X TUBE RILSAN6MM 1 1/8G
5	1	13-04-0286/SS/P	TUBO INOX BLOCCHETTO-SEP. SUP COMPACT	BLOCK-SEPARATOR UP INOX HOSE COMPACT
6	2	13-00-0174E	RACC. 1/8 NPT - TUBO 6 MM ERMETO	STRAIGHT FITTING 1/8 NPT PIPE 6MM ERMETO
7	2	13-04-0285/SS/P	TUBO INOX BLOCCHETTO-FILTRO COMPACT	BLOCK-FILTER INOX HOSE COMPACT
8	1	13-04-0284/SS/P	TUBO INOX BLOCCHETTO-SEP. INF COMPACT	BLOCK-SEPARATOR DOWN INOX HOSE COMPACT
9	1	TUBRILSAN6X4	TUBO RILSAN 6X4	RILSAN HOSE 6X4
10	0,6	TUBRILSAN6X4/N	TUBO RILSAN NERO 6X4 PER ALTE TEMPERATURE	BLACK RILSAN HOSE 6X4 HIGHT TEMPERATURE
11	0,9	TUBRILSAN6X4/N	TUBO RILSAN NERO 6X4 PER ALTE TEMPERATURE	BLACK RILSAN HOSE 6X4 HIGHT TEMPERATURE
12	1	13-00-0025E	RACCORDO 1/4 G -TUBO 6MM DIRITTO ERMETO	FITTING 1/4 G -PIPE 6MM ERMETO
13	1	GUAR1319	RONDELLA 1/4 IN RAME	COPPER WASHER 1/4
14	1	TAN/80/5-2L	TANICA SC 5L 2 FORI 18MM LATERALI	SC TANK 5L 2HOLE 18MM SIDE
15	1	13-00-0162/N	NYLON SCARICO CONDENSA	CONDENSATE DISCHARGE NYLON

SCARICO CONDENSA - CONDENSATE DISCHARGE

Mod: Compact - Compact Evo

2.4(1) La valvola deve essere stretta con una coppia di serraggio di **20Nm** - The valve must be tightened with a torque of **20Nm**

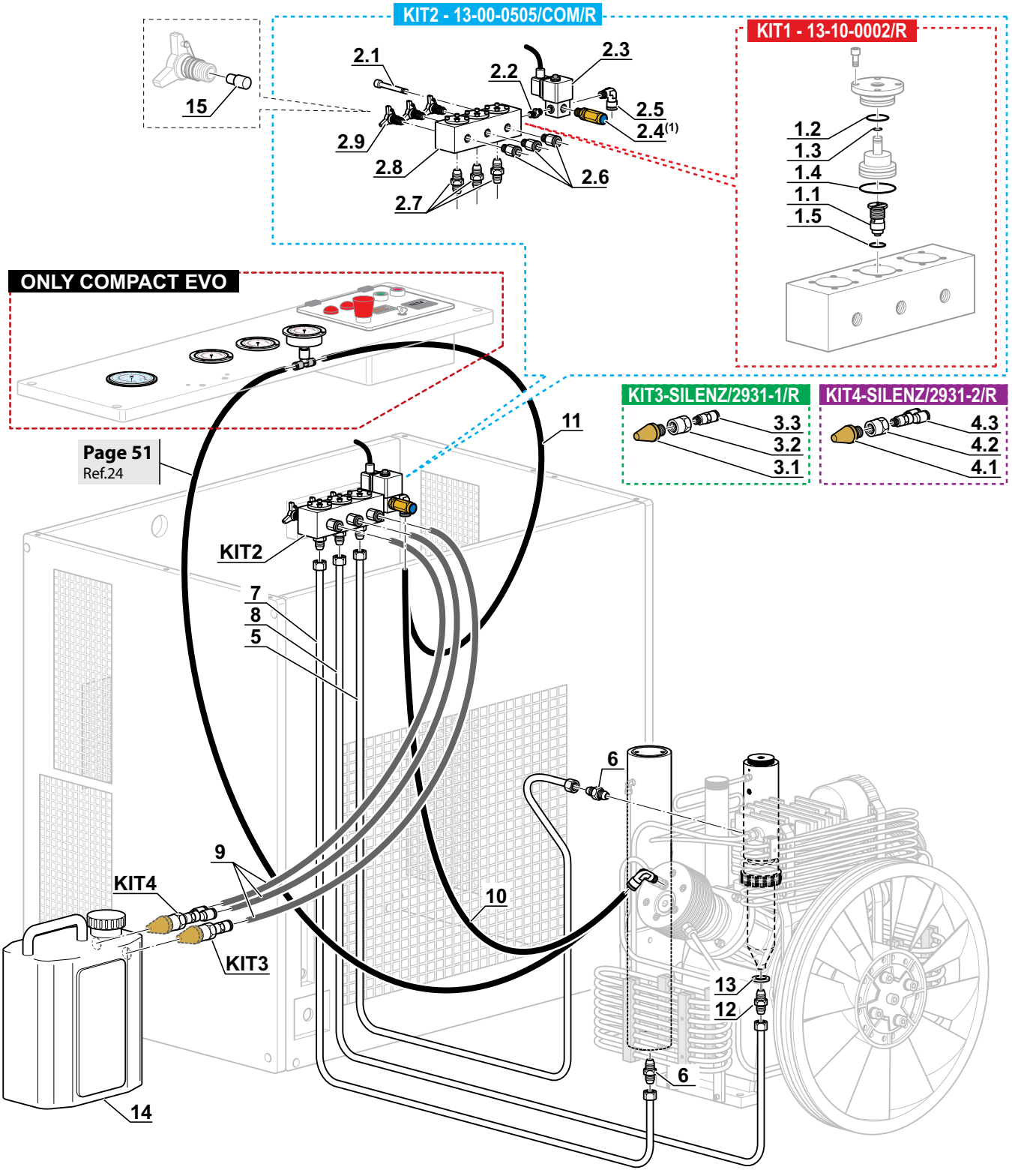

SCARICO CONDENSA - CONDENSATE DISCHARGE

Mod: Mini Silent - Mini Silent Evo

Rif. Pos.	Q.tà Q.ty	Codice Code	Descrizione	Description
KIT1	1	13-10-0002/R	KIT INIETTORI SCARICO CONDENSA	KIT INJECTORS CONDENSATE DRAIN
1.1	3		INIETTORE SCARICO CONDENSA	INJECTOR CONDENSATE DRAIN
1.2	3		O RING 2118 90SH (29.87X1.78)	O RING 2118 90SH (29.87X1.78)
1.3	3		O RING 2018 90SH (4,48X1,78)	O RING 2018 90SH (4,48X1,78)
1.4	3		O RING 2100 NBR 90SH	O RING 2100 NBR 90SH
1.5	3		O RING 114 90 SH	O RING 114 90 SH
KIT2	1	13-00-0505/MS/R	KIT BLOCCHETTO SCARICO CONDENSA MINISILENT	MINISILENT CONDENSATE DISCHARGE KIT
2.1	2		VITE T.C.E. INOX 6X45	SCREW T.C.E. INOX 6X45
2.2	1		RACC. DIRITTO M 1/8 NPT - M 1/8 NPT	STRAIGHT FITTING M 1/8 NPT - M 1/8 NPT
2.3	1	13-04-0221/N	ELETTR. LP SCAR. COND. 3 VIE NC 1/8" NBR D.2 V.220/50-60	LP SOLENOID VALVE
2.4	1	13-00-0205	VALVOLA SICUREZZA 1° STADIO MCH-13-16 10BAR	1ST STAGE SAFETY VALVE MCH-13-16 10BAR
2.5	1		RACC. L GIR. CONICO E2L31C08 1/8 M TUBO 6	TURNING FITTING 1/8M TUBE6
2.6	3		RACC. DIRITTO CILINDRICO MASCHIO CON OR 1/8	1/8 E2001007W FITTING WITH OR
2.7	3		RACC. 1/8 NPT 7/16 TUBO 6 MM	STRAIGHT 1/8 PIPE FITTING 6
2.8	1		KIT BLOCCHETTO VALVOLA SCARICO CONDENSA	CONDENSATE DISCHARGE VALVE
2.9	3		KIT RUBINETTO SCARICO CONDENSA 1/8 NPT	CONDENSATE DISCHARGE BODY VALVE1/8 NPT KIT
KIT3	1	SILENZ/2931-1/R	KIT SILENZIATORE PER TANICA 1 TUBO	KIT SILENCER FOR TANK 1 PIPE
3.1	1		SILENZIATORE 2931 3/8 F	2931 3/8 F SILENCER
3.2	1		RACCORDO 2553 1/8 3/8	2553 1/8 3/8 FITTING
3.3	1		RACC. DIRITTO MASCHIO CON OR 1/8M TUBO 6	FITTING WITH OR E2L01007 1/8M TUBE 6
KIT4	1	SILENZ/2931-2/R	KIT SILENZIATORE PER TANICA 2 TUBI	KIT SILENCER FOR TANK 2 PIPE
4.1	1		SILENZIATORE 2931 3/8 F	2931 3/8 F SILENCER
4.2	1		RACCORDO 2553 1/8 3/8	2553 1/8 3/8 FITTING
4.3	1		RACCORDO Y MASCHIO 2 X TUBO 6 1 1/8G	FITTING E2L26006 Y 2 X TUBE RILSAN6MM 1 1/8G
5	1	13-04-0327/AIR	TUBO HP 700MM AIR	HP 700MM AIR HOSE
6	2	13-04-0284/AIR	TUBO HP 600MM AIR	HP 600MM AIR TUBE
7	1	13-04-0322/AIR	TUBO HP 500MM AIR	HP 500MM AIR HOSE
8	0,5	TUBRILSAN6X4	TUBO RILSAN 6X4	RILSAN HOSE 6X4
9	0,5	TUBRILSAN6X4/N	TUBO RILSAN NERO 6X4 PER ALTE TEMPERATURE	BLACK RILSAN HOSE 6X4 HIGHT TEMPERATURE
10	1	RACC/E2L31C08	RACC. 90° MASCHIO GIREVOLE CONICO 1/8 M TUBO 6	TURNING FITTING 90° WITH OR 1/8 TUBE 6
11	1	36-07-008	RACCORDO 90° 1/4NPT - 7/16	FITTING 90° 1/4NPT - 7/16
12	2	13-00-0144	RACCORDO 90° 1/8 - 7/16 TUBO 6MM	FITTING 90° 1/8 - TUBO 6MM
13	1	TAN/80/5-2L	TANICA SC 5L 2 FORI 18MM LATERALI	SC TANK 5L 2HOLE 18MM SIDE
14	1	13-00-0162/N	NYLON SCARICO CONDENSA	CONDENSATE DISCHARGE NYLON

SCARICO CONDENSA - CONDENSATE DISCHARGE

Mod: Mini Silent - Mini Silent Evo

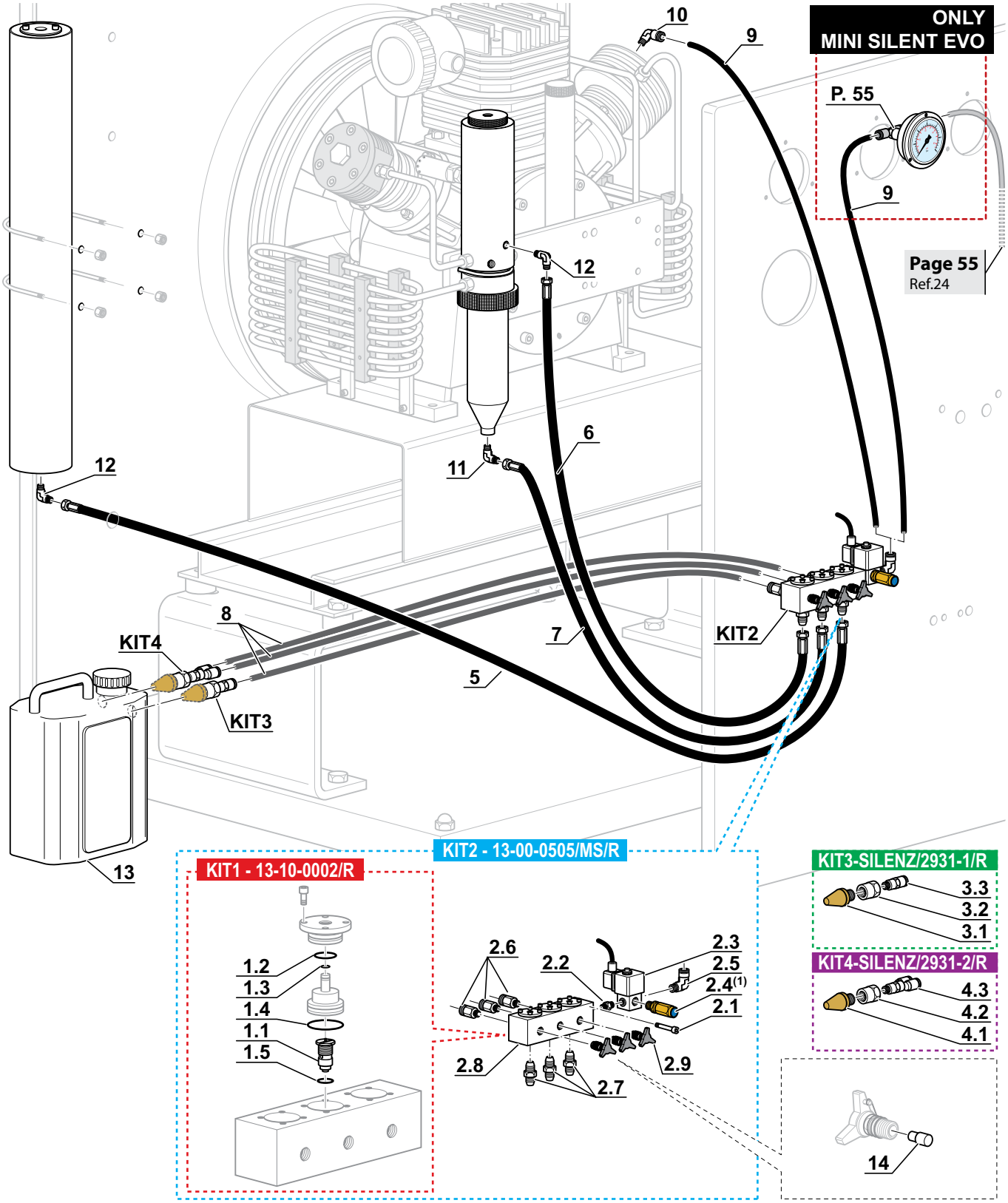

2.4(1) La valvola deve essere stretta con una coppia di serraggio di **20Nm** - The valve must be tightened with a torque of **20Nm**

SCARICO CONDENSA - CONDENSATE DISCHARGE

Mod: Super Silent Evo

Rif. Pos.	Q.tà Q.ty	Codice Code	Descrizione	Description
KIT1	1	13-10-0002/SS/R	KIT UGELLI SCARICO CONDENSA SUPER SILENT EVO	KIT NOZZLES CONDENSATE DRAIN SUPER SILENT EVO
1.1A	2		UGELLO SCARICO CONDENSA Ø0,8	NOZZLE CONDENSATE DRAIN Ø0,8
1.1B	1		UGELLO SCARICO CONDENSA Ø2,5	NOZZLE CONDENSATE DRAIN Ø2,5
1.2	3		O RING 2118 90SH (29.87X1.78)	O RING 2118 90SH (29.87X1.78)
1.3	3		O RING 2018 90SH (4,48X1,78)	O RING 2018 90SH (4,48X1,78)
1.4	3		O RING 2100 NBR 90SH	O RING 2100 NBR 90SH
KIT2	1	13-00-0505/SS/R	KIT BLOCCHETTO SCARICO COND. SUPERSILENTEVO	SUPERSILENTEVO CONDENSATE DISCHARGE KIT
2.1	2		VITE T.C.E. INOX 6X45	SCREW T.C.E. INOX 6X45
2.2	1		RACC. DIRITTO M 1/8 NPT - M 1/8 NPT	STRAIGHT FITTING M 1/8 NPT - M 1/8 NPT
2.3	1	13-04-0221/N	ELETTR. LP SCAR. COND. 3 VIE NC 1/8" NBR D.2 V.220/50-60	LP SOLENOID VALVE
2.4	1	13-00-0205	VALVOLA SICUREZZA 1° STADIO MCH-13-16 10BAR	1ST STAGE SAFETY VALVE MCH-13-16 10BAR
2.5	1		RACC. L GIREVOLE CONICO E2L31C08 1/8 M TUBO 6	TURNING FITTING 1/8M TUBE6
2.6	3		RACC. DIRITTO CILINDRICO MASCHIO CON OR 1/8	1/8 E2001007W FITTING WITH OR
2.7	3		RACCORDO 1/8 NPT TUBO 6MM	STRAIGHT 1/8 PIPE FITTING 6
2.8	1		KIT BLOCCHETTO VALVOLA SCARICO CONDENSA	CONDENSATE DISCHARGE VALVE
2.9	3		KIT RUBINETTO SCARICO CONDENSA 1/8 NPT	CONDENSATE DISCHARGE BODY VALVE1/8 NPT KIT
3	1	13-00-0162/N	NYLON SCARICO CONDENSA	CONDENSATE DISCHARGE NYLON
4	1	TAN/80/5-1T	TANICA SC 5L 1 FORO 25MM SU TAPPO	SC TANK 5L 1HOLE 25MM PLUG
5	1	GUAR1319	RONDELLA 1/4 IN RAME	COPPER WASHER 1/4
6	1	13-00-0174E	RACCORDO 1/8 NPT TUBO 6MM	STRAIGHT 1/8 PIPE FITTING 6
7	2	13-04-0287/SS/P	TUBO INOX BLOCCHETTO-SEPARATORE SUP S.S.E.	BLOCK-SEPARATOR UP INOX HOSE S.S.E.
8	1	13-04-0322/SS/P	TUBO INOX BLOCCHETTO-SEPARATORE INF S.S.E.	BLOCK-SEPARATOR DOWN INOX HOSE S.S.E.
9	1	13-04-0199/SS/P	TUBO INOX BLOCCHETTO-FILTRO S.S.E.	BLOCK-FILTER INOX HOSE S.S.E.
10	1	TUBRILSAN6X4/N	TUBO RILSAN NERO 6X4 PER ALTE TEMPERATURE	BLACK RILSAN HOSE 6X4 HIGHT TEMPERATURE
11	0,8	TUBRILSAN6X4	TUBO RILSAN 6X4	RILSAN HOSE 6X4
12	1	13-00-0025E	RACCORDO 1/4 G -TUBO 6MM DIRITTO ERMETO	FITTING 1/4 G -PIPE 6MM ERMETO
13	1	RACC/E231506L18	RACCORDO E231-506L 1/8' NPT TUBO 6 LARGA	FITTING E231-506L 1/8' NPT TUBE 6 LARGA
14	3	36-07-065	RACCORDO 90° 1/4 NPT TUBO Ø8	FITTING 90° 1/4 NPT TUBE Ø8
15	1	13-07-074	SERBATOIO SCARICO CONDENSA MOD.SILENT	CONDENSATE DISCHARGE TANK MOD.SILENT
16	4	RON6Z	RONDELLA PIANA ZINC. M6	PLAIN WASHER ZINC. M6 DIN 125A
17	4	VITE0620	VITE T.C.E. ZINC. 6X20 DIN912	SCREW T.C.E. ZINC. 6X20 DIN912
18	1	FASC/3B/17/29	FASCETTA STRING. 3B D.17/29	CLAMP 3B D.17/29
19	1	T-SP-16X23-750	TUBO SPIRALATO PER ALIMENTI 16X23 L=750	FOOD SPIRAL HOSE 16X23 L=750

SCARICO CONDENSA - CONDENSATE DISCHARGE

Mod: Super Silent Evo

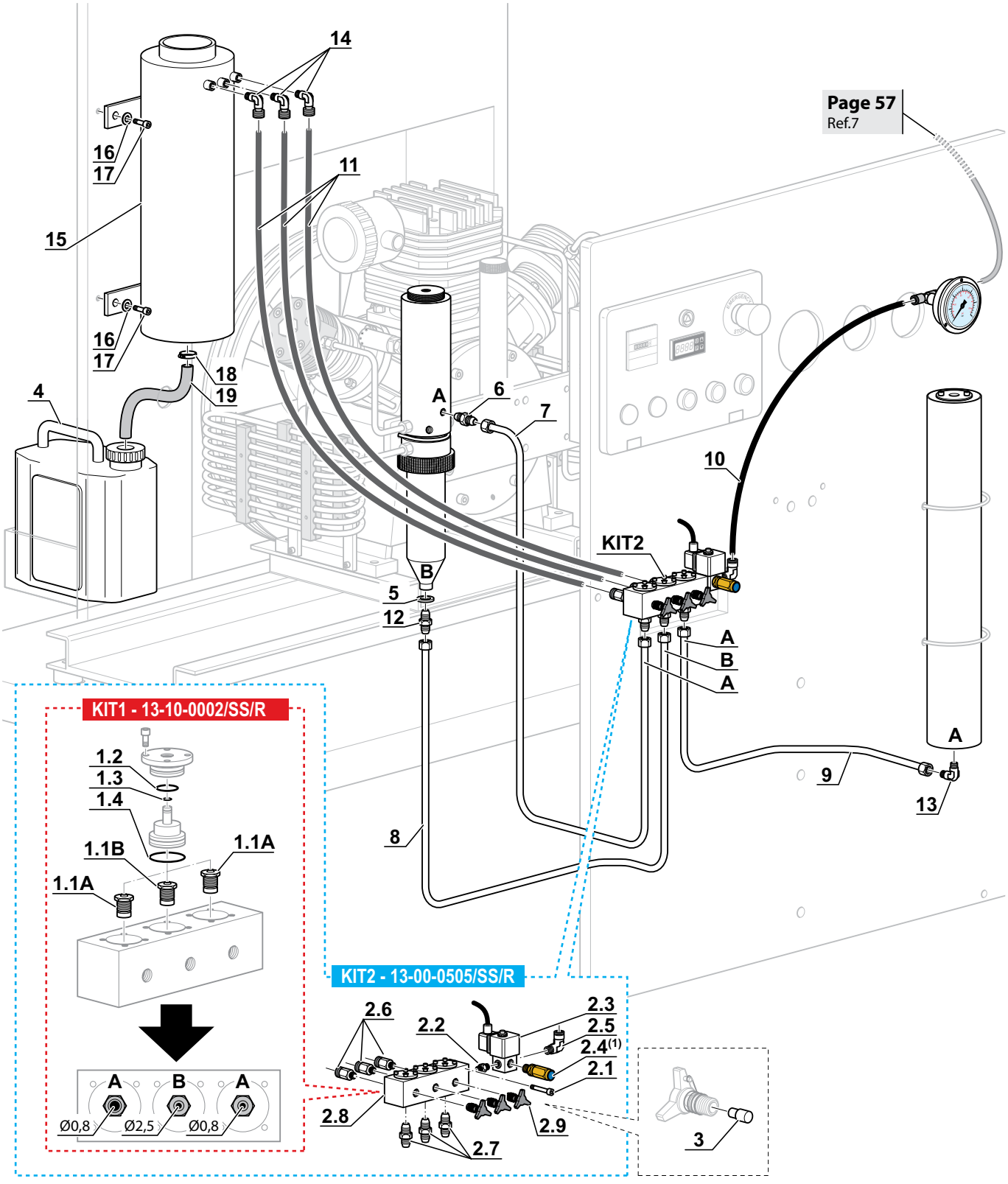

2.4(1) La valvola deve essere stretta con una coppia di serraggio di **20Nm** - The valve must be tightened with a torque of **20Nm**

SCARICO CONDENSA - CONDENSATE DISCHARGE

Mod: MCH26-32/ET Compact

Rif. Pos.	Q.tà Q.ty	Codice Code	Descrizione	Description
KIT1	1	13-10-0002/R	KIT INIETTORI SCARICO CONDENSA	KIT INJECTORS CONDENSATE DRAIN
1.1	3		INIETTORE SCARICO CONDENSA	INJECTOR CONDENSATE DRAIN
1.2	3		O RING 2118 90SH (29.87X1.78)	O RING 2118 90SH (29.87X1.78)
1.3	3		O RING 2018 90SH (4,48X1,78)	O RING 2018 90SH (4,48X1,78)
1.4	3		O RING 2100 NBR 90SH	O RING 2100 NBR 90SH
1.5	3		O RING 114 90 SH	O RING 114 90 SH
KIT2	1	13-00-0505/CD1/R	KIT BLOCCH. SCAR. COND. SUP. MCH-26-32 COMPACT	UPPER COND. DISCHARGE MCH-26-32 COMPACT KIT
2.1	2		VITE T.C.E.ZINC. 6X20 DIN912	SCREW T.C.E. 6X20 ZINC.
2.2	1		RACC. DIRITTO M 1/8 NPT - M 1/8 NPT	STRAIGHT FITTING M 1/8 NPT - M 1/8 NPT
2.3	1	13-04-0221/N	ELETTR. LP SCAR. COND. 3 VIE NC 1/8" NBR D.2 V.220/50-60	LP SOLENOID VALVE
2.4	1	13-00-0205	VALVOLA SICUREZZA 1° STADIO MCH-13-16 10BAR	1ST STAGE SAFETY VALVE MCH-13-16 10BAR
2.5	1		RACC. L MASCHIO GIREVOLE CONICO 1/8 M TUBO 6	TURNING FITTING 1/8M TUBE6
2.6	3		RACC. DIRITTO CILINDRICO MASCHIO CON OR 1/8	1/8 E2001007W FITTING WITH OR
2.7	3		RACCORDO 90° 1/8 - 7/16 TUBO 6MM	FITTING 90° 1/8 - TUBO 6MM
2.8	1		KIT BLOCCHETTO VALVOLA SCARICO CONDENSA	CONDENSATE DISCHARGE VALVE
2.9	3		KIT RUBINETTO SCARICO CONDENSA 1/8 NPT	CONDENSATE DISCHARGE BODY VALVE1/8 NPT KIT
KIT3	1	13-00-0505/CD2/R	KIT BLOCCH. SCAR. COND. INF. MCH-26-32 COMPACT	LOWER COND. DISCHARGE MCH-26-32 COMPACT KIT
3.1	2		VITE T.C.E.ZINC. 6X20 DIN912	SCREW T.C.E. 6X20 ZINC.
3.2	1		RACC. DIRITTO M 1/8 NPT - M 1/8 NPT	STRAIGHT FITTING M 1/8 NPT - M 1/8 NPT
3.3	1	13-04-0221/N	ELETTR. LP SCAR. COND. 3 VIE NC 1/8" NBR D.2 V.220/50-60	LP SOLENOID VALVE
3.4	1	13-00-0205	VALVOLA SICUREZZA 1° STADIO MCH-13-16 10BAR	1ST STAGE SAFETY VALVE MCH-13-16 10BAR
3.5	1		RACC. L MASCHIO GIREVOLE CONICO 1/8 M TUBO 6	TURNING FITTING 1/8M TUBE6
3.6	3		RACCORDO E2L26006 Y MASCHIO 2 X TUBO 6 1 1/8G	FITTING E2L26006 Y 2 X TUBE RILSAN6MM 1 1/8G
3.7	3		RACCORDO 90° 1/8 - 7/16 TUBO 6MM	FITTING 90° 1/8 - TUBO 6MM
3.8	1		KIT BLOCCHETTO VALVOLA SCARICO CONDENSA	CONDENSATE DISCHARGE VALVE
3.9	3		KIT RUBINETTO SCARICO CONDENSA 1/8 NPT	CONDENSATE DISCHARGE BODY VALVE1/8 NPT KIT
KIT4	1	SILENZ/2931-1/R	KIT SILENZIATORE PER TANICA 1 TUBO	KIT SILENCER FOR TANK 1 PIPE
4.1	1		SILENZIATORE 2931 3/8 F	2931 3/8 F SILENCER
4.2	1		RACCORDO 2553 1/8 3/8	2553 1/8 3/8 FITTING
4.3	1		RACC. DIRITTO MASCHIO CON OR 1/8M TUBO 6	FITTING WITH OR E2L01007 1/8M TUBE 6
KIT5	1	SILENZ/2931-2/R	KIT SILENZIATORE PER TANICA 2 TUBI	KIT SILENCER FOR TANK 2 PIPE
5.1	1		SILENZIATORE 2931 3/8 F	2931 3/8 F SILENCER
5.2	1		RACCORDO 2553 1/8 3/8	2553 1/8 3/8 FITTING
5.3	1		RACCORDO Y MASCHIO 2 X TUBO 6 1 1/8G	FITTING E2L26006 Y 2 X TUBE RILSAN6MM 1 1/8G
6	1	13-00-0162/N	NYLON SCARICO CONDENSA	CONDENSATE DISCHARGE NYLON
7	3	RACC/PASS/6	RACCORDO PASSAPARETE RAPIDO DIAM.6	THROUGH-WALL FITTING TUBE 6X4 RILSAN
8	2	RACC/E2L31C08	RACC. 90° MASCHIO GIR.CONICO 1/8 M TUBO 6	TURNING FITTING 90° WITH OR 1/8 TUBE 6
9	0,4	TUBRILSAN6X4/N	TUBO RILSAN NERO 6X4 PER ALTE TEMPERATURE	BLACK RILSAN HOSE 6X4 HIGHT TEMPERATURE
10	0,4	TUBRILSAN6X4	TUBO RILSAN 6X4	RILSAN HOSE 6X4
11	1,2	TUBRILSAN6X4	TUBO RILSAN 6X4	RILSAN HOSE 6X4
12	2	13-04-0219/AIR	TUBO HP 400MM AIR	HP 400MM AIR HOSE
13	2	36-07-008	RACCORDO 90° 1/4NPT - 7/16	FITTING 90° 1/4NPT - 7/16
14	4	13-00-0144	RACCORDO 90° 1/8 - 7/16 TUBO 6MM	FITTING 90° 1/8 - TUBO 6MM
15	1	13-04-0285/AIR	TUBO HP R8 800MM AIR	HP R8 800MM AIR HOSE
16	0,9	TUBRILSAN6X4	TUBO RILSAN 6X4	RILSAN HOSE 6X4
17	1	TAN/80/5-3L	TANICA SC 5L 3 FORI 18MM LATERALI	SC TANK 5L 3HOLE 18MM SIDE
18	1	13-04-0327/AIR	TUBO HP 700MM AIR	HP 700MM AIR HOSE
19	2	13-04-0284/AIR	TUBO HP 600MM AIR	HP 600MM AIR HOSE

SCARICO CONDENSA - CONDENSATE DISCHARGE

Mod: MCH26-32/ET Compact

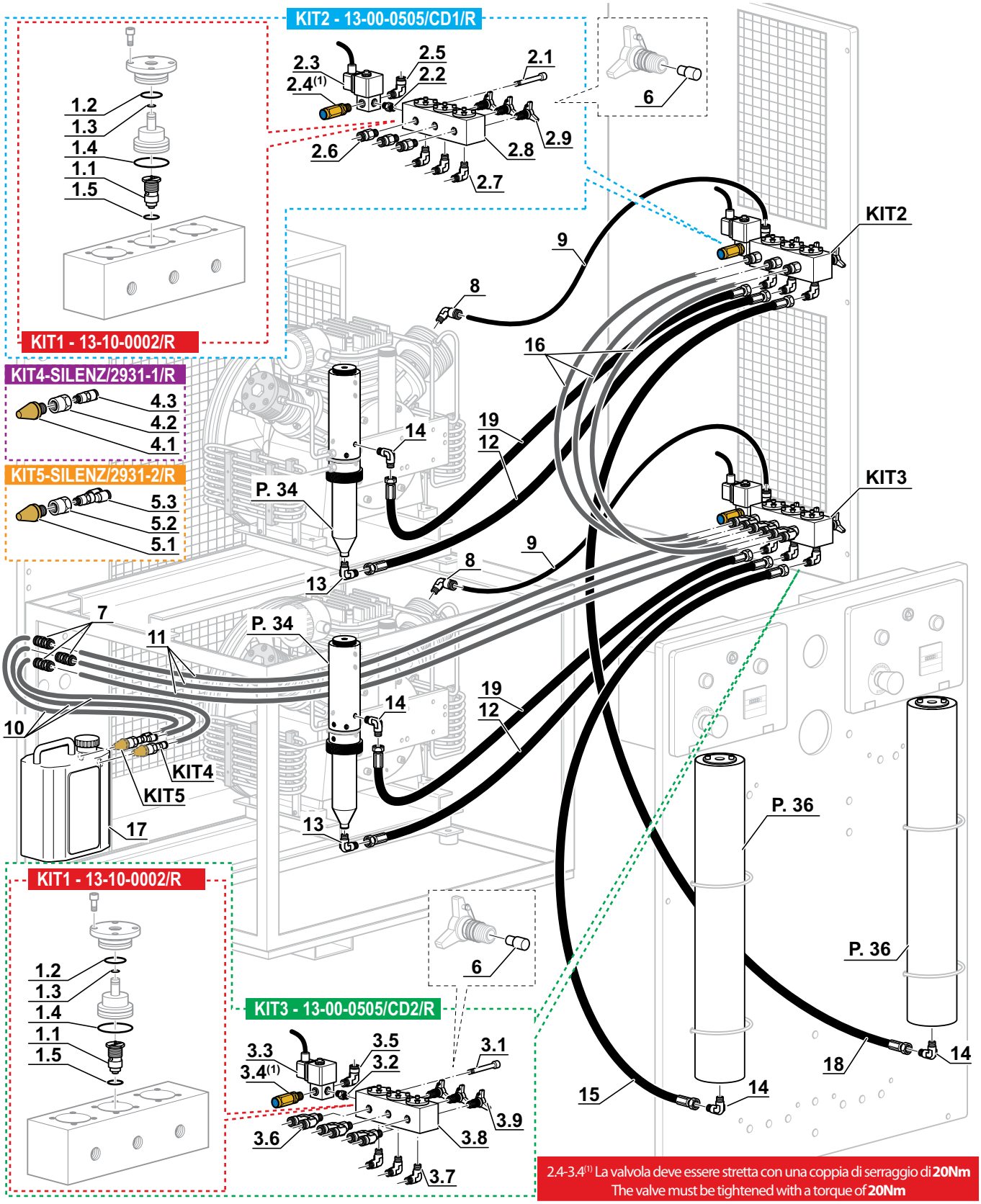

2.4-3.4(1) La valvola deve essere stretta con una coppia di serraggio di **20Nm**
The valve must be tightened with a torque of **20Nm**

SCARICO CONDENSA - CONDENSATE DISCHARGE

Mod: Super Silent Evo Tropical Plus

Rif. Pos.	Q.tà Q.ty	Codice Code	Descrizione	Description
KIT1	1	13-10-0002/SSTP/R	KIT UGELLI SCARICO CONDENSA SUPER SILENT EVO TROPICAL PLUS	KIT NOZZLES CONDENSATE DRAIN SUPER SILENT EVO TROPICAL PLUS
1.1A	2		UGELLO SCARICO CONDENSA Ø0,8	NOZZLE CONDENSATE DRAIN Ø0,8
1.1B	1		UGELLO SCARICO CONDENSA Ø2,5	NOZZLE CONDENSATE DRAIN Ø2,5
1.1C	1		UGELLO SCARICO CONDENSA Ø4,0	NOZZLE CONDENSATE DRAIN Ø4,0
1.2	3		O RING 2118 90SH (29.87X1.78)	O RING 2118 90SH (29.87X1.78)
1.3	3		O RING 2018 90SH (4,48X1,78)	O RING 2018 90SH (4,48X1,78)
1.4	3		O RING 2100 NBR 90SH	O RING 2100 NBR 90SH
KIT2	1	13-00-0505/SS/R	KIT BLOCCHETTO SCARICO COND. SUPERSILENTEVO	SUPERSILENTEVO CONDENSATE DISCHARGE KIT
2.1	2		VITE T.C.E. INOX 6X45	SCREW T.C.E. INOX 6X45
2.2	1		RACC. DIRITTO M 1/8 NPT - M 1/8 NPT	STRAIGHT FITTING M 1/8 NPT - M 1/8 NPT
2.3	1	13-04-0221/N	ELETTR. LP SCAR. COND. 3 VIE NC 1/8" NBR D.2 V.220/50-60	LP SOLENOID VALVE
2.4	1	13-00-0205	VALVOLA SICUREZZA 1° STADIO MCH-13-16 10BAR	1ST STAGE SAFETY VALVE MCH-13-16 10BAR
2.5	1		RACC. L GIREVOLE CONICO E2L31C08 1/8 M TUBO 6	TURNING FITTING 1/8M TUBE6
2.6	3		RACC. DIRITTO CILINDRICO MASCHIO CON OR 1/8	1/8 E2001007W FITTING WITH OR
2.7	3		RACCORDO 1/8 NPT TUBO 6MM	STRAIGHT 1/8 PIPE FITTING 6
2.8	1		KIT BLOCCHETTO VALVOLA SCARICO CONDENSA	CONDENSATE DISCHARGE VALVE
2.9	3		KIT RUBINETTO SCARICO CONDENSA 1/8 NPT	CONDENSATE DISCHARGE BODY VALVE1/8 NPT KIT
3	1	13-00-0162/N	NYLON SCARICO CONDENSA	CONDENSATE DISCHARGE NYLON
4	1	TAN/80/5-1T	TANICA SC 5L 1 FORO 25MM SU TAPPO	SC TANK 5L 1HOLE 25MM PLUG
5	2	GUAR1319	RONDELLA 1/4 IN RAME	COPPER WASHER 1/4
6	1	13-00-0174E	RACCORDO 1/8 NPT TUBO 6MM	STRAIGHT 1/8 PIPE FITTING 6
7	2	13-04-0287/SS/P	TUBO INOX BLOCCHETTO-SEPARATORE SUP S.S.E.	BLOCK-SEPARATOR UP INOX HOSE S.S.E.
8	1	13-04-0322/SS/P	TUBO INOX BLOCCHETTO-SEPARATORE INF S.S.E.	BLOCK-SEPARATOR DOWN INOX HOSE S.S.E.
9	1	13-04-0284/SS/P	TUBO INOX BLOCCHETTO-SEPARATORE INF LP S.S.E TP	BLOCK-SEPARATOR DOWN INOX HOSE LP S.S.E TP
10	1	TUBRILSAN6X4/N	TUBO RILSAN NERO 6X4 PER ALTE TEMPERATURE	BLACK RILSAN HOSE 6X4 HIGHT TEMPERATURE
11	0,8	TUBRILSAN6X4	TUBO RILSAN 6X4	RILSAN HOSE 6X4
12	2	13-00-0025E	RACCORDO 1/4 G -TUBO 6MM DIRITTO ERMETO	FITTING 1/4 G -PIPE 6MM ERMETO
13	1	T-SP-16X23-750	TUBO SPIRALATO PER ALIMENTI 16X23 L=750	FOOD SPIRAL HOSE 16X23 L=750
14	3	36-07-065	RACCORDO 90° 1/4 NPT TUBO Ø8	FITTING 90° 1/4 NPT TUBE Ø8
15	1	13-07-074	SERBATOIO SCARICO CONDENSA MOD.SILENT	CONDENSATE DISCHARGE TANK MOD.SILENT
16	4	RON6Z	RONDELLA PIANA ZINC. M6	PLAIN WASHER ZINC. M6 DIN 125A
17	4	VITE0620	VITE T.C.E. ZINC. 6X20 DIN912	SCREW T.C.E. ZINC. 6X20 DIN912
18	1	FASC/3B/17/29	FASCETTA STRING. 3B D.17/29	CLAMP 3B D.17/29

SCARICO CONDENSA - CONDENSATE DISCHARGE

Mod: Super Silent Evo Tropical Plus

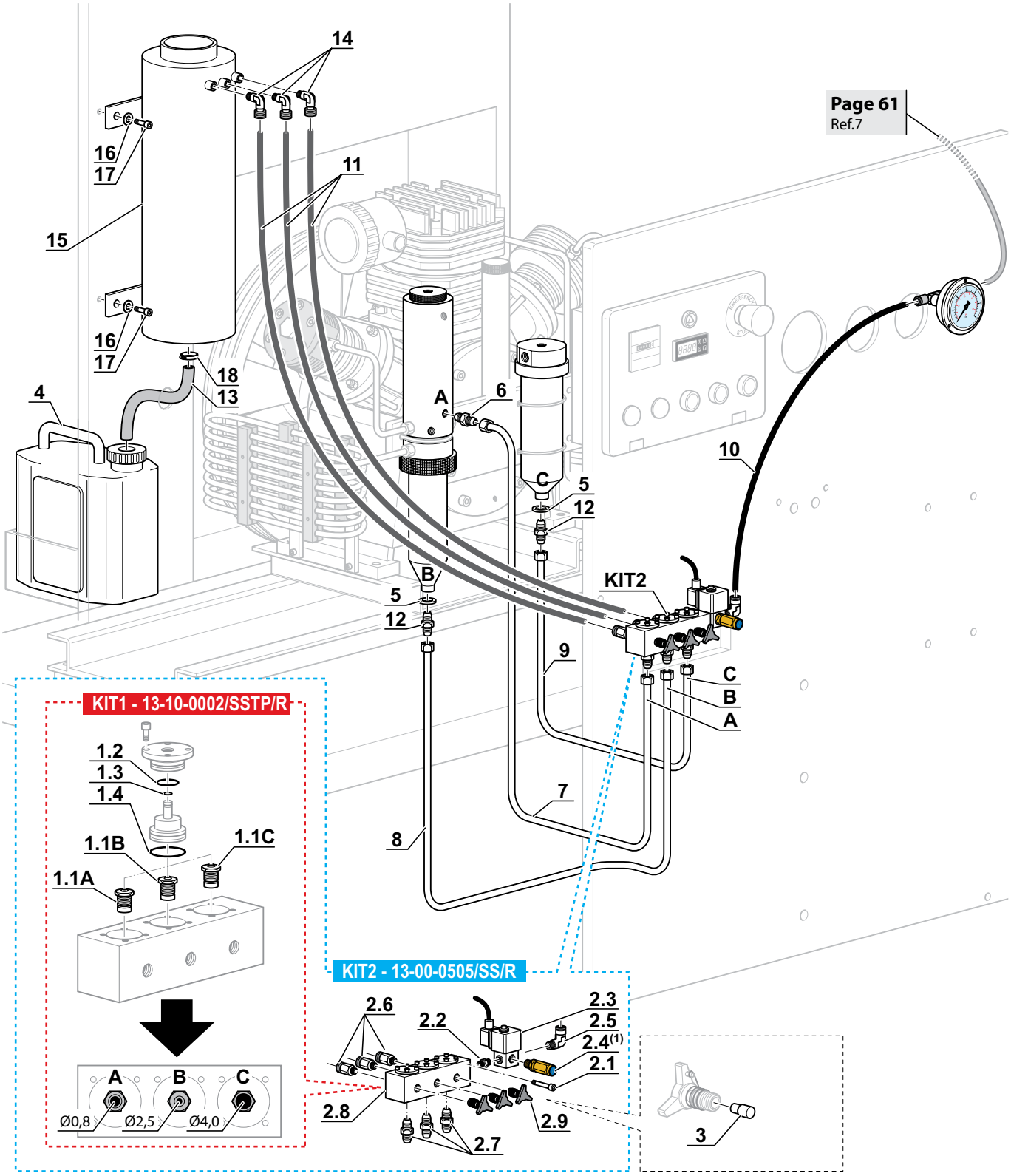

2.4(1) La valvola deve essere stretta con una coppia di serraggio di **20Nm** - The valve must be tightened with a torque of **20Nm**

SCARICO CONDENSA - CONDENSATE DISCHARGE

Mod: Mark2

Rif. Pos.	Q.tà Q.ty	Codice Code	Descrizione	Description
KIT1	1	13-10-0002/R	KIT INIETTORI SCARICO CONDENSA	KIT INJECTORS CONDENSATE DRAIN
1.1	3		INIETTORE SCARICO CONDENSA	INJECTOR CONDENSATE DRAIN
1.2	3		O RING 2118 90SH (29.87X1.78)	O RING 2118 90SH (29.87X1.78)
1.3	3		O RING 2018 90SH (4,48X1,78)	O RING 2018 90SH (4,48X1,78)
1.4	3		O RING 2100 NBR 90SH	O RING 2100 NBR 90SH
1.5	3		O RING 114 90 SH	O RING 114 90 SH
KIT2	1	13-00-0505/MS/R	KIT BLOCCHETTO SCARICO CONDENSA MINISILENT	MINISILENT CONDENSATE DISCHARGE KIT
2.1	2		VITE T.C.E. INOX 6X45	SCREW T.C.E. INOX 6X45
2.2	1		RACC. DIRITTO M 1/8 NPT - M 1/8 NPT	STRAIGHT FITTING M 1/8 NPT - M 1/8 NPT
2.3	1	13-04-0221/N	ELETTR. LP SCAR. COND. 3 VIE NC 1/8" NBR D.2 V.220/50-60	LP SOLENOID VALVE
2.4	1	13-00-0205	VALVOLA SICUREZZA 1° STADIO MCH-13-16 10BAR	1ST STAGE SAFETY VALVE MCH-13-16 10BAR
2.5	1		RACC. L GIR. CONICO E2L31C08 1/8 M TUBO 6	TURNING FITTING 1/8M TUBE6
2.6	3		RACC. DIRITTO CILINDRICO MASCHIO CON OR 1/8	1/8 E2001007W FITTING WITH OR
2.7	3		RACC. 1/8 NPT 7/16 TUBO 6 MM	STRAIGHT 1/8 PIPE FITTING 6
2.8	1		KIT BLOCCHETTO VALVOLA SCARICO CONDENSA	CONDENSATE DISCHARGE VALVE
2.9	3		KIT RUBINETTO SCARICO CONDENSA 1/8 NPT	CONDENSATE DISCHARGE BODY VALVE1/8 NPT KIT
KIT3	1	SILENZ/2931-1/R	KIT SILENZIATORE PER TANICA 1 TUBO	KIT SILENCER FOR TANK 1 PIPE
3.1	1		SILENZIATORE 2931 3/8 F	2931 3/8 F SILENCER
3.2	1		RACCORDO 2553 1/8 3/8	2553 1/8 3/8 FITTING
3.3	1		RACC. DIRITTO MASCHIO CON OR 1/8M TUBO 6	FITTING WITH OR E2L01007 1/8M TUBE 6
KIT4	1	SILENZ/2931-2/R	KIT SILENZIATORE PER TANICA 2 TUBI	KIT SILENCER FOR TANK 2 PIPE
4.1	1		SILENZIATORE 2931 3/8 F	2931 3/8 F SILENCER
4.2	1		RACCORDO 2553 1/8 3/8	2553 1/8 3/8 FITTING
4.3	1		RACCORDO Y MASCHIO 2 X TUBO 6 1 1/8G	FITTING E2L26006 Y 2 X TUBE RILSAN6MM 1 1/8G
5	1	13-00-0162/N	NYLON SCARICO CONDENSA	CONDENSATE DISCHARGE NYLON
6	1	RACC/E2L31009	RACC. L MASCHIO GIREVOLE CONICO 1/4 M TUBO 6	TURNING FITTING 1/4M TUBE6
7	1	13-00-0174E	RACC. 1/8 NPT TUBO 6 MM	STRAIGHT 1/8 PIPE FITTING 6
8	1	13-04-0284/SS/P	TUBO INOX 6X1 SEP. INFERIORE-BLOCCHETTO VSC	INOX PIPE 6X1 LOWER SEPARATOR-VSC BLOCK
9	1	13-04-0286/SS/P	TUBO INOX 6X1 SEP. SUPERIORE-BLOCCHETTO VSC	INOX PIPE 6X1 UPPER SEPARATOR-VSC BLOCK
10	1	TUBRILSAN6X4/N	TUBO RILSAN NERO 6X4 PER ALTE TEMPERATURE	BLACK RILSAN HOSE 6X4 HIGHT TEMPERATURE
11	0,9	TUBRILSAN6X4/N	TUBO RILSAN NERO 6X4 PER ALTE TEMPERATURE	BLACK RILSAN HOSE 6X4 HIGHT TEMPERATURE
12	1	13-00-0025E	RACCORDO 1/4 G -TUBO 6MM DIRITTO ERMETO	FITTING 1/4 G -TUBO 6MM ERMETO
13	1,2	TUBRILSAN6X4	TUBO RILSAN 6X4	RILSAN HOSE 6X4
14	1	TAN/80/5-2L	TANICA SC 5L 2 FORI 18MM LATERALI	SC TANK 5L 2HOLE 18MM SIDE

SCARICO CONDENSA - CONDENSATE DISCHARGE

Mod: Mark2

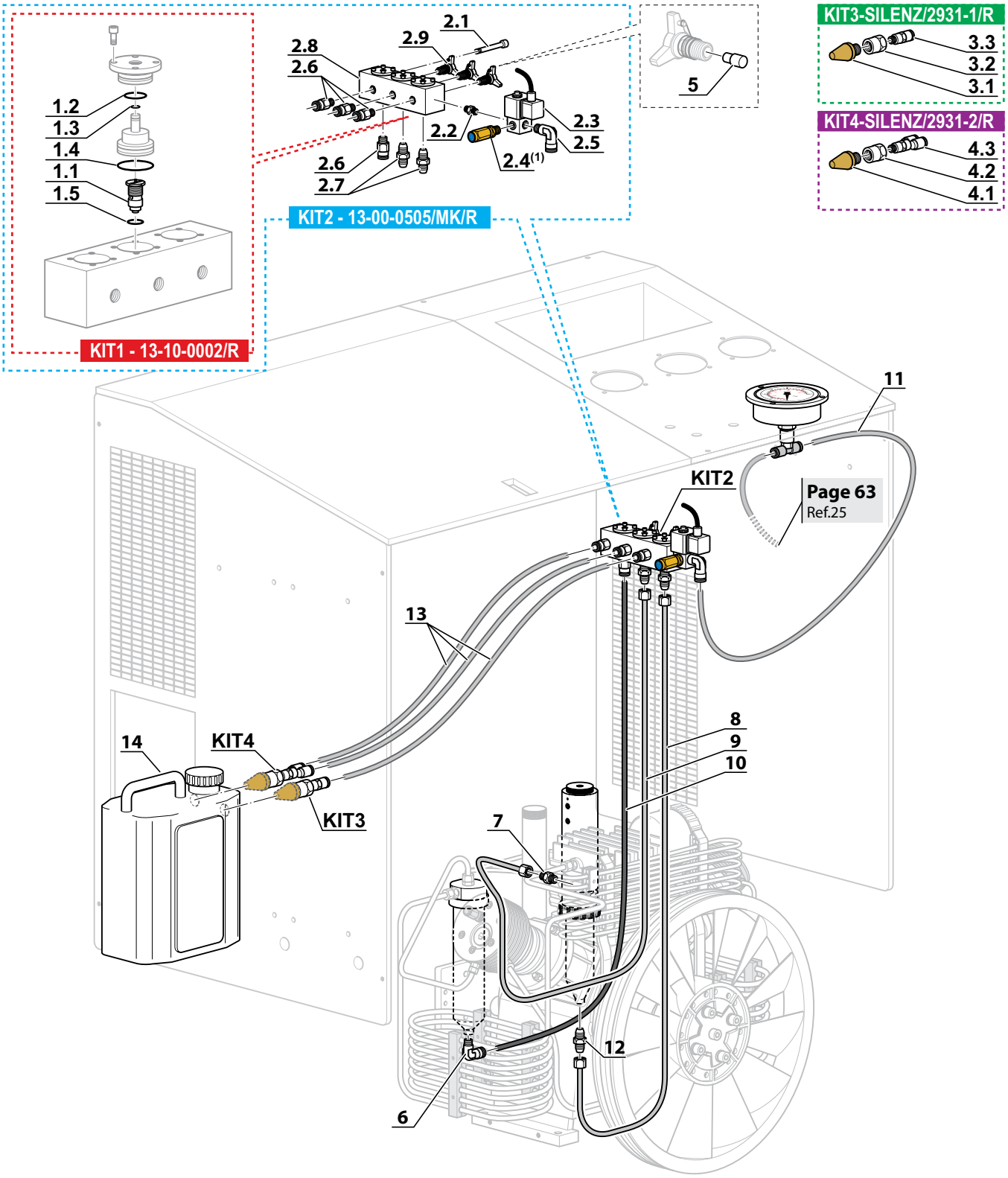

2.4(1) La valvola deve essere stretta con una coppia di serraggio di **20Nm** - The valve must be tightened with a torque of **20Nm**

TELAIO - FRAME
Mod: Standard EM-ET

Rif. Pos.	Q.tà Q.ty	Codice Code	Descrizione	Description
KIT1	1	SC1316/ST/EL/AP	TELAIO STANDARD EM-ET	FRAME STANDARD EM-ET
1.1	1		CARTER	COVER
1.2	1		STAFFA A "L"	CLAMP "L"
1.3	1		TELAIO	CHASSIS
1.4	4		PIEDINO IN GOMMA (40x30)	RUBBER FOOT (40x30)
1.5	1		VITE T.E. ZINC. 8X25 DIN933	SCREW T.E. ZINC. 8X25 DIN933
1.6	4		RONDELLA PIANA ZINC. M6	WASHER PLANT ZINC. M6
1.7	2		DADO ZINCATO AUTOBLOC. M6	NUT ZINC. AUTOBLOC. M6 DIN 982
1.8	2		VITE T.C.E. ZINC. 6X25 DIN912	SCREW T.C.E. ZINC. 6X25 DIN912
1.9	4		VITE T.C.E. ZINC. 8X20	SCREW T.C.E. ZINC. 8X20
1.10	16		RONDELLA PIANA ZINCATA M8	WASHER PLANT ZINC. M8
1.11	8		DADO ZINCATO AUTOBLOC. M8	NUT ZINC. AUTOBLOC. M8
1.12	4		VITE T.C.E. ZINC. 8X35	SCREW T.C.E. ZINC. 8X35

TELAIO - FRAME
Mod: Standard EM-ET

KIT 1

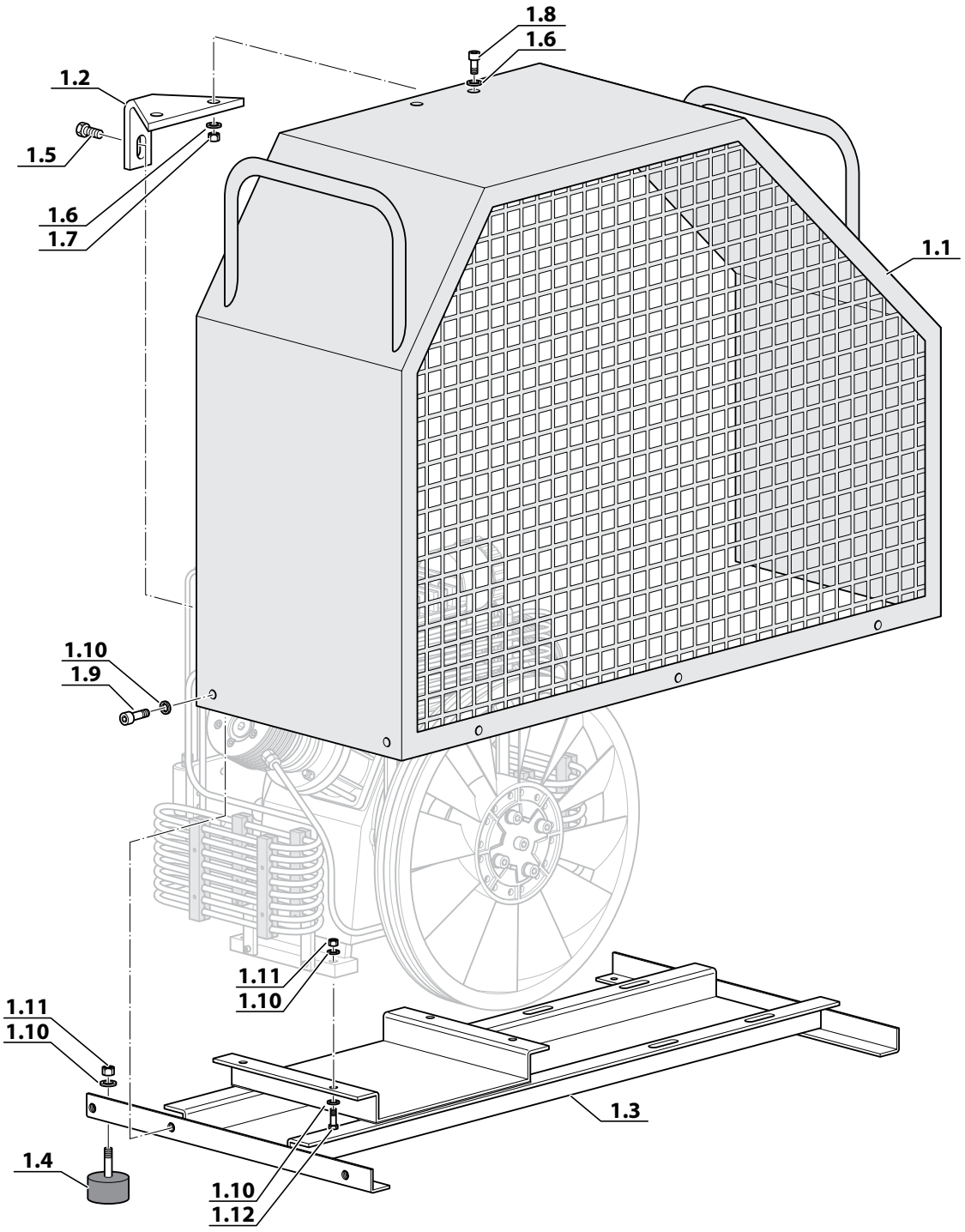

TELAIO - FRAME
Mod: Tech

Rif. Pos.	Q.tà Q.ty	Codice Code	Descrizione	Description
KIT1	1	SC1316/TECH	TELAIO TECH SH	FRAME TECH SH
1.1	1		TELAIO	CHASSIS
1.2	1		CARTER	COVER
1.3	1		PANNELLO SINISTRO	LEFT PANNEL
1.4	1		PANNELLO DESTRO	RIGHT PANNEL
1.5	1		PANNELLO ANTERIORE	FRONT PANNEL
1.6	1		MANIGLIA	HANDLE
1.7	4		ANTIVIBRANTE	VIBRATION DAMPER
1.8	4		PIEDINO IN GOMMA (50x30)	RUBBER FOOT (50x30)
1.9	1		PORTA TUBO ASPIRAZIONE TECH	SUPPORT SUCTION HOSE REMOTE
1.10	1		TUBO ASPIRAZIONE A DISTANZA DIA. 30X1000 TECH	SUCTION HOSE REMOTE
1.11	28		VITE T.C.E. ZINC. 6X20 DIN912	SCREW T.C.E. ZINC. 6X20 DIN912
1.12	28		RONDELLA PIANA ZINC. M6	WASHER PLANT ZINC. M6
1.13	2		VITE T.E. ZINC. 8X12 DIN933	SCREW T.E. ZINC. 8X12 DIN933
1.14	4		VITE T.C.E. ZINC. 8X45 DIN912	SCREW T.E. ZINC. 8X45 DIN912
1.15	24		RONDELLA PIANA ZINCATA M8	WASHER PLANT ZINC. M8
1.16	16		DADO ZINCATO AUTOBLOC. M8	NUT ZINC. AUTOBLOC. M8
1.17	4		VITE T.C.E. ZINC. 8X35	SCREW T.C.E. ZINC. 8X35
1.18	1		TAPPO TUBO ASP. A DISTANZA TECH	PLUG SUCTION HOSE REMOTE
1.19	3		O RING 3118 NBR 90SH (29,82X2,62)	O RING 3118 NBR 90SH (29,82X2,62)
1.20	2		FASCETTA STRING. 4B D.25/37	CLAMP 4B D.25/37
1.21	1		TUBO ARMAPLAST D.MM 25X33	SUCTION HOSE ARMAPLAST D.MM 25X33

TELAIO - FRAME
Mod: Tech

KIT 1

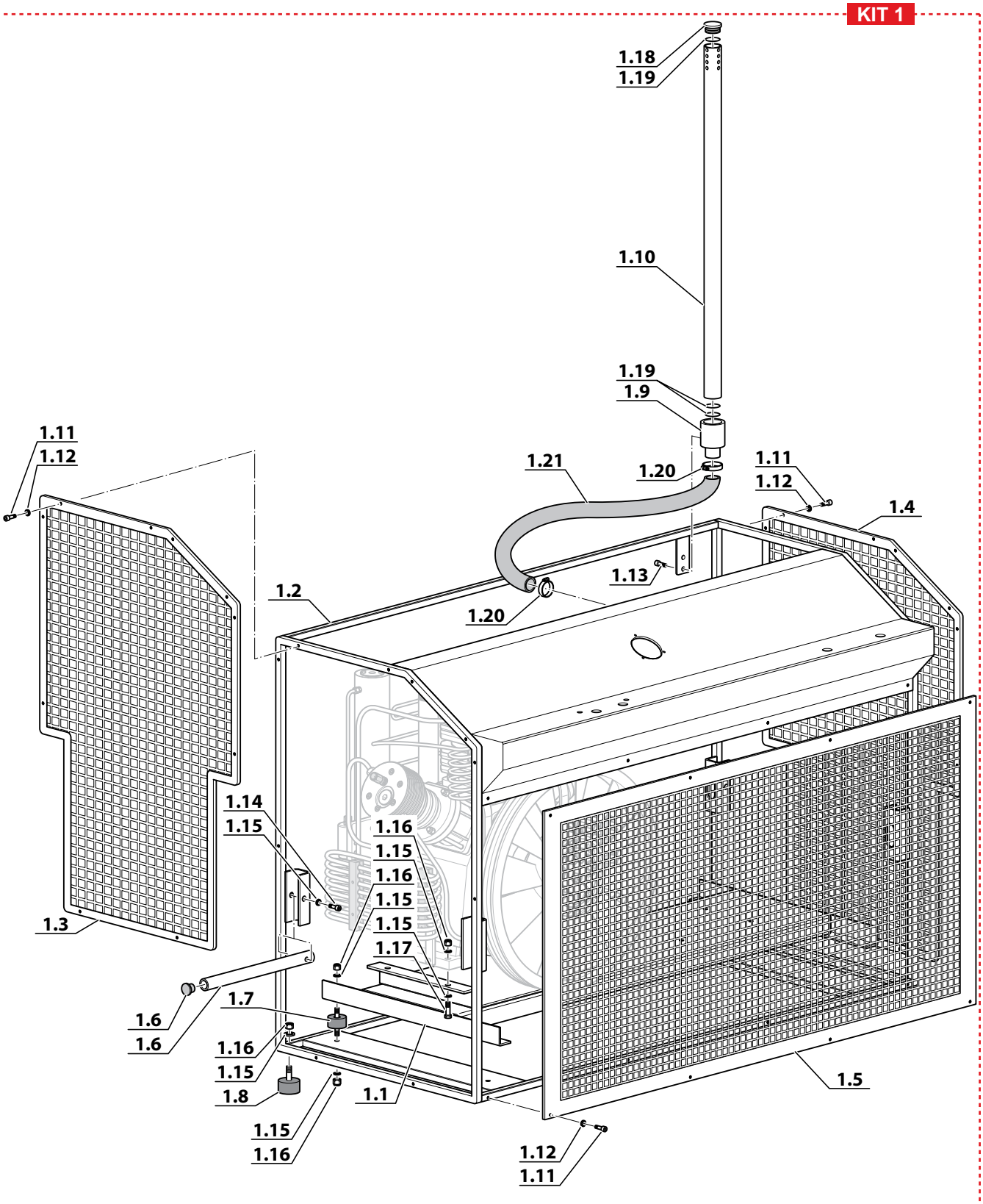

TELAIO - FRAME
Mod: MiniTech SH - MiniTech DL-DY

Rif. Pos.	Q.tà Q.ty	Codice Code	Descrizione	Description
KIT1a	1	SC1316/MINITE/ST/B	TELAIO MINITECH SH	FRAME MINITECH SH
KIT1b	1	SC1316/MINITE/Y	TELAIO MINITECH DL-DY	FRAME MINITECH DL-DY
1.1a	1		CARTER MINITECH SH	COVER MINITECH SH
1.1b	1		CARTER MINITECH DL-DY	COVER MINITECH DL-DY
1.2	1		TELAIO	CHASSIS
1.3a	1		PANNELLO ANTERIORE SH	FRONT PANNEL SH
1.3b	1		PANNELLO ANTERIORE DL-DY	FRONT PANNEL DL-DY
1.4	1		MANIGLIA	HANDLE
1.5	4		ANTIVIBRANTE	VIBRATION DAMPER
1.6	4		PIEDINO IN GOMMA (50x30)	RUBBER FOOT (50x30)
1.7	8		VITE T.C.E. ZINC. 6X20 DIN912	SCREW T.C.E. ZINC. 6X20 DIN912
1.8	8		RONDELLA PIANA ZINC. M6	WASHER PLANT ZINC. M6
1.9	4		VITE T.C.E. ZINC. 8X45 DIN912	SCREW T.E. ZINC. 8X45 DIN912
1.10	24		RONDELLA PIANA ZINCATA M8	WASHER PLANT ZINC. M8
1.11	16		DADO ZINCATO AUTOBLOC. M8	NUT ZINC. AUTOBLOC. M8
1.12	4		VITE T.C.E. ZINC. 8X35	SCREW T.C.E. ZINC. 8X35
1.13	1		PORTA TUBO ASPIRAZIONE TECH	SUPPORT SUCTION HOSE REMOTE
1.14	1		TUBO ASPIRAZIONE A DISTANZA DIA. 30X1000 TECH	SUCTION HOSE REMOTE
1.15	2		VITE T.E. ZINC. 8X12 DIN933	SCREW T.E. ZINC. 8X12 DIN933
1.16	1		TAPPO TUBO ASP. A DISTANZA TECH	PLUG SUCTION HOSE REMOTE
1.17	3		O RING 3118 NBR 90SH (29,82X2,62)	O RING 3118 NBR 90SH (29,82X2,62)
1.18	2		FASCETTA STRING. 4B D.25/37	CLAMP 4B D.25/37
1.19	1		TUBO ARMAPLAST D.MM 25X33 (X MCH13-16)	SUCTION HOSE ARMAPLAST D.MM 25X33

TELAIO - FRAME

Mod: MiniTech SH - MiniTech DL-DY

KIT 1a - MINITECH SH
KIT 1b - MINITECH DL-DY

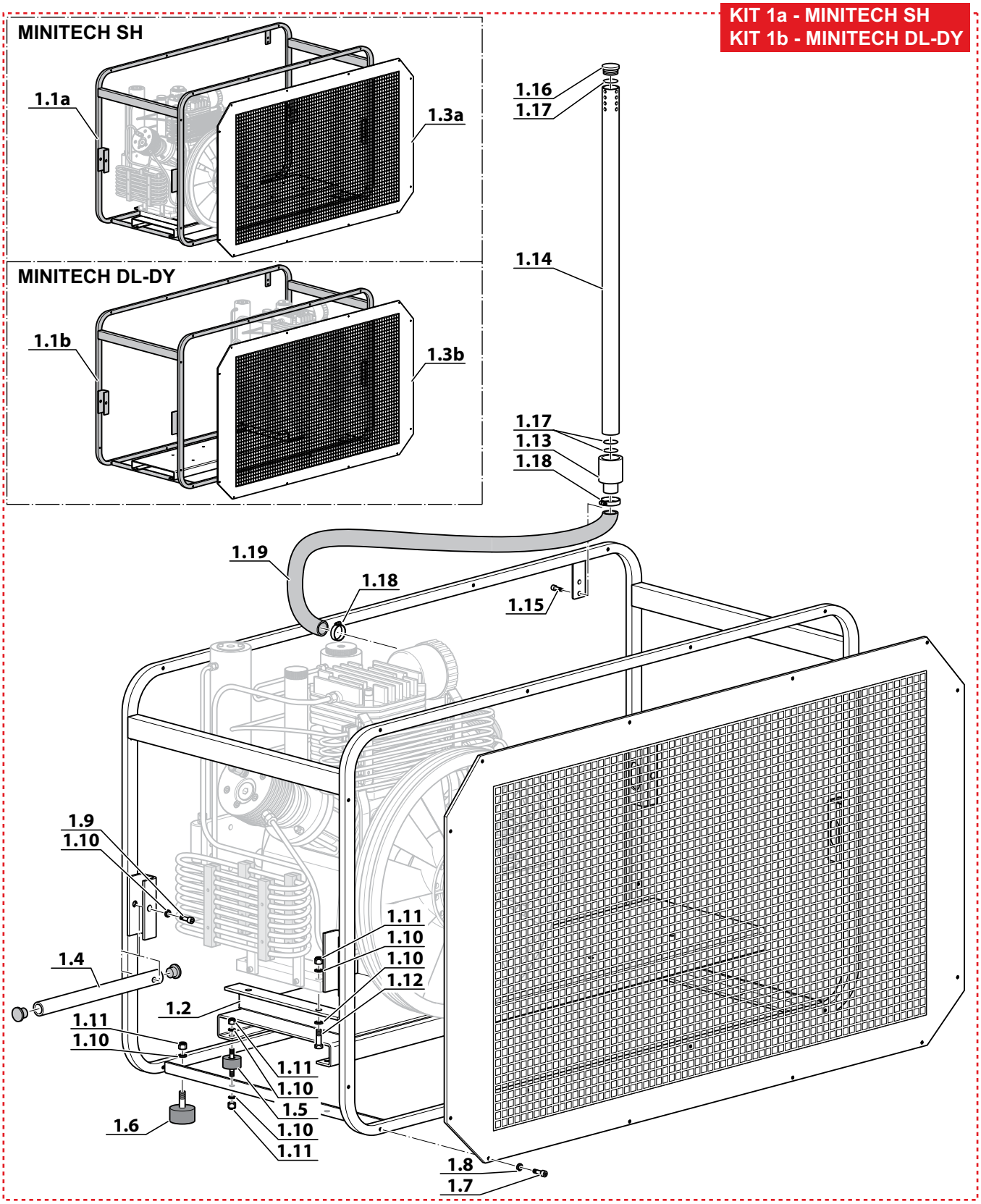

TELAIO - FRAME
Mod: Compact - Compact Evo

Rif. Pos.	Q.tà Q.ty	Codice Code	Descrizione	Description
KIT1a	1	SC1316/COMP/G	TELAIO COMPACT	FRAME COMPACT
KIT1b	1	SC1316/COMP/EV/G	TELAIO COMPACT EVO	FRAME COMPACT EVO
1.1	4		PIEDINO IN GOMMA (50x30)	RUBBER FOOT (50x30)
1.2	4		ANTIVIBRANTE	VIBRATION DAMPER
1.3	1		TELAIO	CHASSIS
1.4	1		CARTER	COVER
1.5	1		PANNELLO DESTRO	RIGHT PANNEL
1.6	1		PANNELLO SINISTRO	LEFT PANNEL
1.7	1		PANNELLO ANTERIORE	FRONT PANNEL
1.8	1		PANNELLO POSTERIORE	REAR PANNEL
1.9	1		PANNELLO SUPERIORE	UPPER PANNEL
1.10a	1		PANNELLO COMANDO COMPACT	CONTROL PANNEL COMPACT
1.10b			PANNELLO COMANDO COMPACT EVO	CONTROL PANNEL COMPACT EVO
1.11a	1		PANNELLO ELETTRICO COMPACT	ELECTRICAL PANNEL COMPACT
1.11b			PANNELLO ELETTRICO COMPACT EVO	ELECTRICAL PANNEL COMPACT EVO
1.12	1		SERRATURA	LOCK
1.13	17		VITE T.C.E. ZINC. 6X30 DIN912	SCREW T.C.E. ZINC. 6X30 DIN912
1.14	12		DADO ZINCATO AUTOBLOC. M8	NUT ZINC. AUTOBLOC. M8
1.15	20		RONDELLA PIANA ZINCATA M8	WASHER PLANT ZINC. M8
1.16	4		VITE T.C.E. ZINC. 8X35	SCREW T.C.E. ZINC. 8X35
1.17	4		DADO ZINCATO AUTOBL. M10 ALTO DIN982	NUT ZINC. AUTOBLOC. M10
1.18	4		RONDELLA PIANA M10 ZINCATA DIN 125	WASHER PLANT ZINC. M10
1.19	4		CERNIERA NERA	HINGE
1.20	16		VITE INOX 5X16 TESTA SVASATATAGLIO CROCE	SCREW
1.21	2		SERRATURA NERA	LOCK

TELAIO - FRAME
Mod: Compact - Compact Evo

KIT 1a - COMPACT
KIT 1b - COMPACT EVO

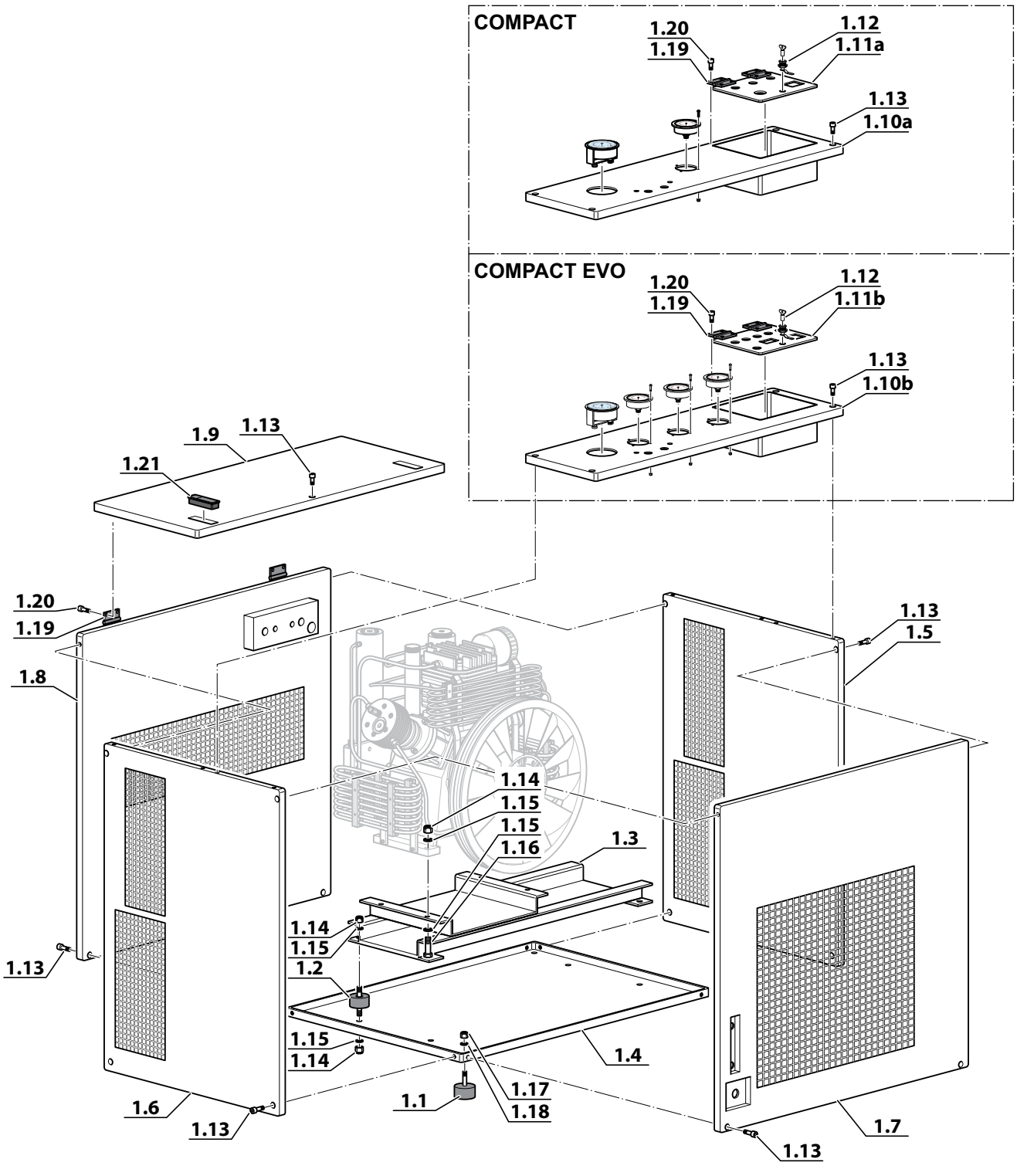

TELAIO - FRAME
Mod: 26-32 Compact

Rif. Pos.	Q.tà Q.ty	Codice Code	Descrizione	Description
KIT1	1	SC2632/COMP/B/G	TELAIO 26-32 COMPACT	FRAME 26-32 COMPACT
1.1	8		ANTIVIBRANTE	VIBRATION DAMPER
1.2	2		TELAIO	CHASSIS
1.3	2		COFANO	HOOD
1.4	1		CARTER	COVER
1.5	1		PANNELLO INTERNO	INTERNAL PANEL
1.6	8		CERNIERA SPORTELLO	DOOR HINGE
1.7	1		PANNELLO DESTRO	RIGHT PANNEL
1.8	1		PANNELLO SINISTRO	LEFT PANNEL
1.9	1		PANNELLO ANTERIORE	FRONT PANNEL
1.10	1		PANNELLO POSTERIORE	REAR PANNEL
1.11	1		PANNELLO SUPERIORE	UPPER PANNEL
1.12	2		PANNELLO ELETTRICO	ELECTRICAL PANNEL
1.13	32		RONDELLA PIANA ZINCATA M8	WASHER PLANT ZINC. M8
1.14	24		DADO ZINCATO AUTOBLOC. M8	NUT ZINC. AUTOBLOC. M8
1.15	8		VITE T.C.E. ZINC. 8X35	SCREW T.C.E. ZINC. 8X35
1.16	14		VITE T.C.E. ZINC. 6X30 DIN912	SCREW T.C.E. ZINC. 6X30 DIN912
1.17	2		SERRATURA	LOCK
1.18	24		VITE T.C.E. ZINC. 6X25 DIN912	SCREW T.C.E. ZINC. 6X25 DIN912
1.19	32		VITE INOX 5X16 TESTA SVASATATAGLIO CROCE	SCREW
1.20	4		BARRA FILETTATA M6 L=180CM	BAR THREADED
1.21	4		DADO INOX CIECO M6 UNI 1587	NUT
1.22	52		RONDELLA PIANA ZINC. M6	WASHER PLANT ZINC. M6
1.23	24		DADO ZINCATO AUTOBLOC. M6	NUT ZINC. AUTOBLOC. M6 DIN 982

TELAIO - FRAME
Mod: 26-32 Compact

KIT 1

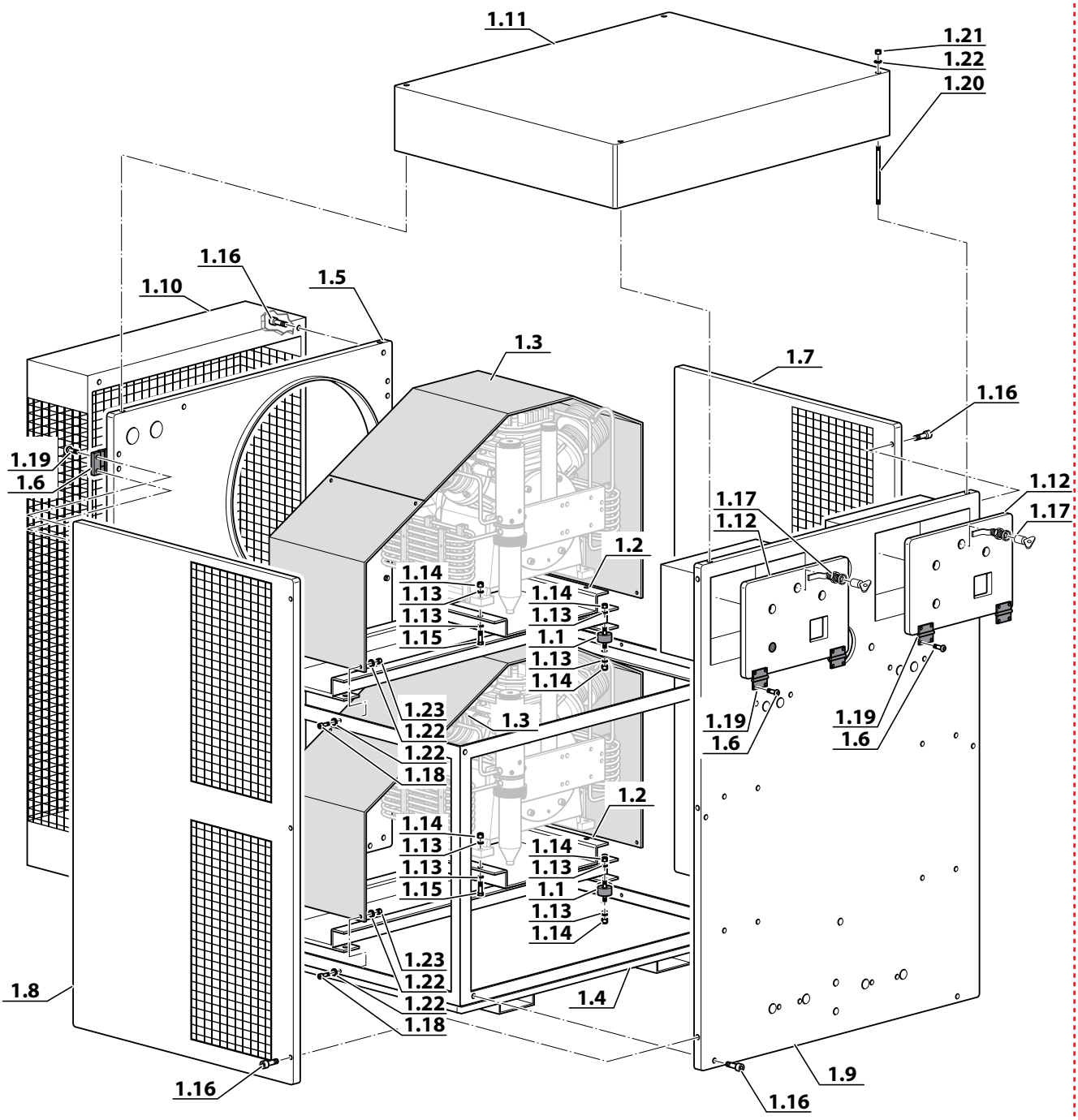

TELAIO - FRAME

Mod: SuperSilent Evo - SuperSilent Evo Tropical Plus

Rif. Pos.	Q.tà Q.ty	Codice Code	Descrizione	Description
KIT1	1	SC1316/SS/EVO/G	TELAIO SUPERSILENT EVO	FRAME SUPERSILENT EVO
1.1	4		ANTIVIBRANTE	VIBRATION DAMPER
1.2	1		TELAIO	CHASSIS
1.3	1		CARTER	COVER
1.4	1		PANNELLO SINISTRO INFERIORE	LEFT LOWER PANNEL
1.5	1		PANNELLO SINISTRO SUPERIORE	LEFT UPPER PANNEL
1.6	1		PANNELLO DESTRO INFERIORE	RIGHT LOWER PANNEL
1.7	1		PANNELLO DESTRO SUPERIORE	RIGHT UPPER PANNEL
1.8	1		PANNELLO ANTERIORE	FRONT PANNEL
1.9	1		PANNELLO INTERNO	INTERNAL PANEL
1.10	1		PANNELLO POSTERIORE	REAR PANNEL
1.11	1		SUPPORTO TANICA	TANK SUPPORT
1.12	1		PANNELLO SUPERIORE	UPPER PANNEL
1.13	1		PANNELLO ELETTRICO	ELECTRICAL PANNEL
1.14	1		SERRATURA	LOCK
1.15	2		SERRATURA NERA	BLACK LOCK
1.16	1		PANNELLO SUPERIORE INTERNO	INTERNAL UPPER PANNEL
1.17	4		PIEDINO IN GOMMA (50x30)	RUBBER FOOT (50x30)
1.18	2		VITE T.C.E. ZINC. 6X25 DIN912	SCREW T.C.E. ZINC. 6X25 DIN912
1.19	2		RONDELLA PIANA ZINC. M6	WASHER PLANT ZINC. M6
1.20	18		VITE T.C.E. ZINC. 6X30 DIN912	SCREW T.C.E. ZINC. 6X30 DIN912
1.21	12		DADO ZINCATO AUTOBLOC. M8	NUT ZINC. AUTOBLOC. M8
1.22	16		RONDELLA PIANA ZINCATA M8	WASHER PLANT ZINC. M8
1.23	4		VITE T.C.E. ZINC. 8X35	SCREW T.C.E. ZINC. 8X35
1.24	8		VITE INOX 5X16 TESTA SVASATATAGLIO CROCE	SCREW
1.25	2		CERNIERA NERA	HINGE

TELAIO - FRAME

Mod: SuperSilent Evo - SuperSilent Evo Tropical Plus

KIT 1

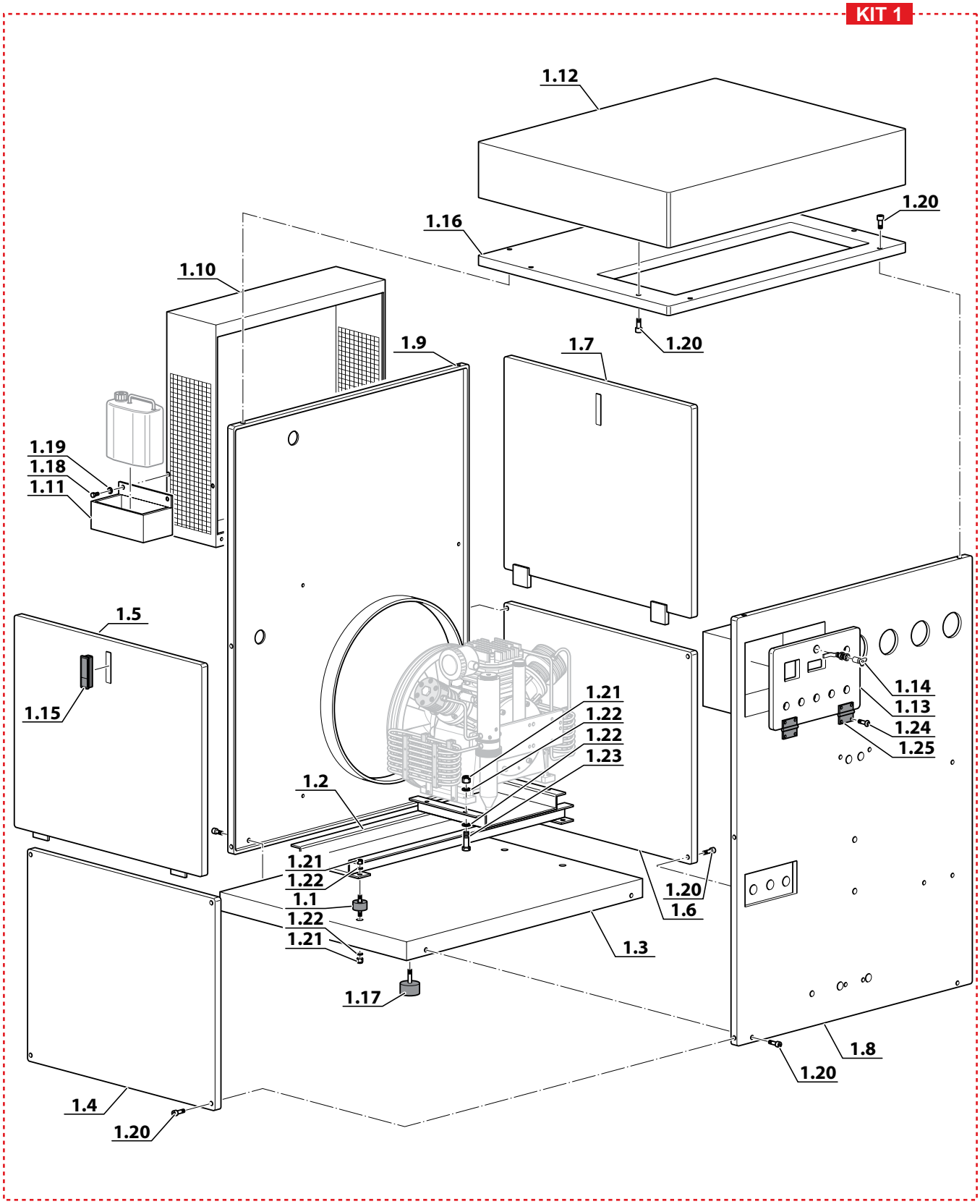

TELAIO - FRAME
Mod: MiniSilent -MiniSilentEvo

Rif. Pos.	Q.tà Q.ty	Codice Code	Descrizione	Description
KIT1a	1	SC1316/MINISIL	TELAIO MINISILENT	FRAME MINISILENT
KIT1b	1	SC1316/MINIEVO/G	TELAIO MINISILENT EVO	FRAME MINISILENT EVO
1.1	4		ANTIVIBRANTE	VIBRATION DAMPER
1.2	1		TELAIO	CHASSIS
1.3	1		CARTER	COVER
1.4	4		PIEDINO IN GOMMA (50x30)	RUBBER FOOT (50x30)
1.5	1		PANNELLO SINISTRO INFERIORE	LEFT LOWER PANNEL
1.6	1		PANNELLO SINISTRO SUPERIORE	LEFT UPPER PANNEL
1.7	1		PANNELLO DESTRO INFERIORE	RIGHT LOWER PANNEL
1.8	1		PANNELLO DESTRO SUPERIORE	RIGHT UPPER PANNEL
1.9	3		SERRATURA	LOCK
1.10a	1		PANNELLO ANTERIORE MINISILENT	FRONT PANNEL MINISILENT
1.10b	1		PANNELLO ANTERIORE MINISILENT EVO	FRONT PANNEL MINISILENT EVO
1.11	1		PANNELLO INTERNO	INTERNAL PANEL
1.12	1		PANNELLO POSTERIORE	REAR PANNEL
1.13	1		PANNELLO INTERNO SUPERIORE	UPPER INTERNAL PANNEL
1.14	3		PANNELLO SUPERIORE	UPPER PANNEL
1.15	2		CERNIERA SPORTELLO	DOOR HINGE
1.16a	1		PANNELLO ELETTRICO MINISILENT	ELECTRICAL PANEL MINISILENT
1.16b	1		PANNELLO ELETTRICO MINISILENT EVO	ELECTRICAL PANEL MINISILENT EVO
1.17	12		VITE INOX 5X16 TESTA SVASATATAGLIO CROCE	SCREW
1.18	20		VITE T.C.E. ZINC. 6X30 DIN912	SCREW T.C.E. ZINC. 6X30 DIN912
1.19	12		DADO ZINCATO AUTOBLOC. M8	NUT ZINC. AUTOBLOC. M8
1.20	16		RONDELLA PIANA ZINCATA M8	WASHER PLANT ZINC. M8
1.21	4		VITE T.C.E. ZINC. 8X35	SCREW T.C.E. ZINC. 8X35

TELAIO - FRAME
Mod: MiniSilent -MiniSilentEvo

KIT 1a - MINISILENT
KIT 1b - MINISILENT EVO

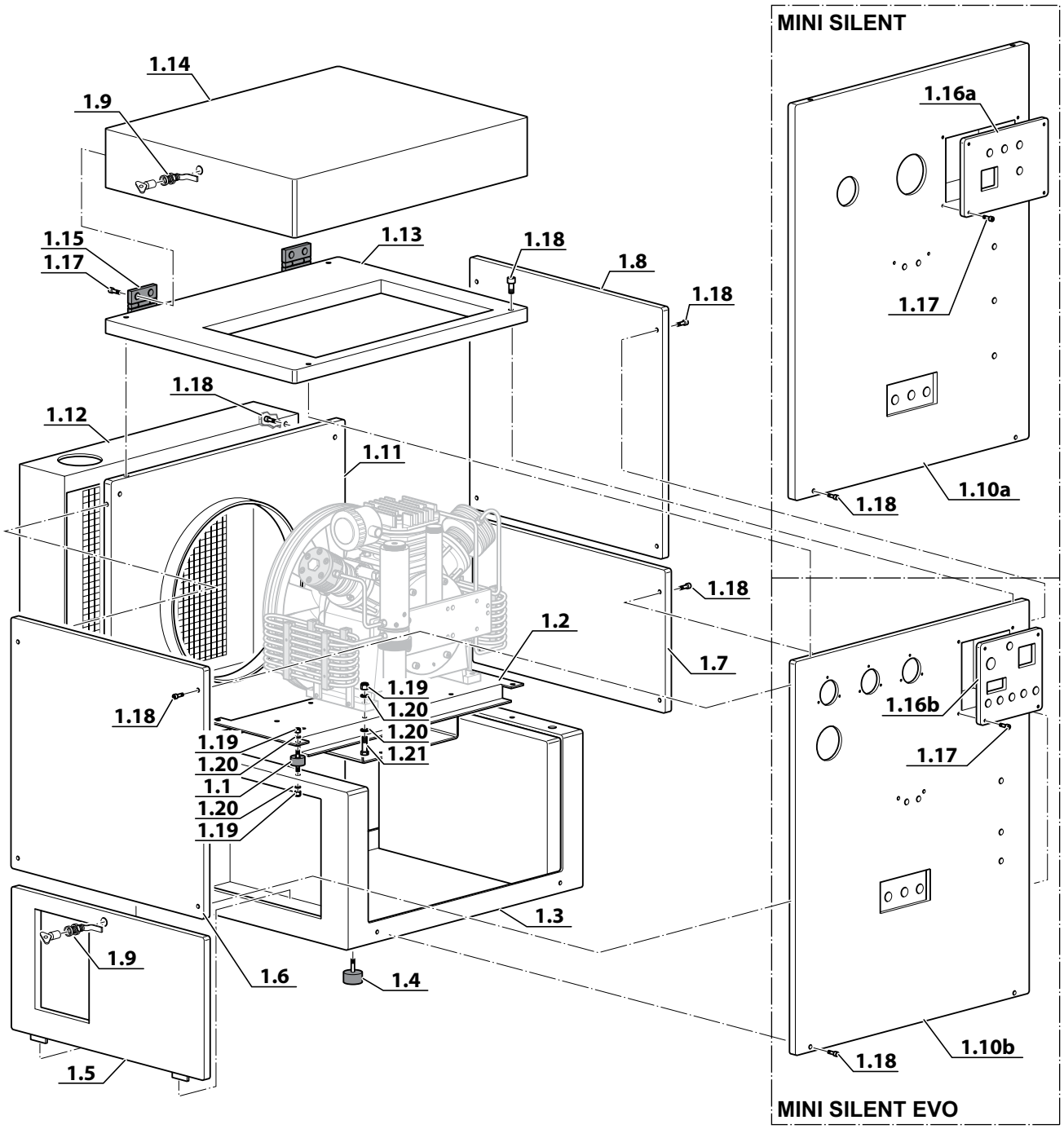

TELAIO - FRAME
Mod: Mark2

Rif. Pos.	Q.tà Q.ty	Codice Code	Descrizione	Description
KIT1	1	SC1316/MARK1-2G	TELAIO MARK1-2	FRAME MARK1-2
1.1	4		PIEDINO IN GOMMA (50x30)	RUBBER FOOT (50x30)
1.2	4		ANTIVIBRANTE	VIBRATION DAMPER
1.3	1		TELAIO	CHASSIS
1.4	1		CARTER	COVER
1.5	1		PANNELLO SINISTRO	LEFT PANNEL
1.6	1		PANNELLO DESTRO	RIGHT PANNEL
1.7	1		PANNELLO ANTERIORE	FRONT PANNEL
1.8	1		PANNELLO POSTERIORE	REAR PANNEL
1.9	1		PANNELLO SUPERIORE	UPPER PANNEL
1.10	1		PANNELLO COMANDO	CONTROL PANNEL
1.11	1		PANNELLO ELETTRICO	ELECTRICAL PANNEL
1.12	1		SUPPORTO TANICA	TANK SUPPORT
1.13	4		CERNIERA SPORTELLO	DOOR HINGE
1.14	16		VITE T.C.E. ZINC. 6X30 DIN912	SCREW T.C.E. ZINC. 6X30 DIN912
1.15	2		VITE T.C.E. ZINC. 6X20 DIN912	SCREW T.C.E. ZINC. 6X20 DIN912
1.16	2		RONDELLA PIANA ZINC. M6	WASHER PLANT ZINC. M6
1.17	16		DADO ZINCATO AUTOBLOC. M8	NUT ZINC. AUTOBLOC. M8
1.18	20		RONDELLA PIANA ZINCATA M8	WASHER PLANT ZINC. M8
1.19	4		VITE T.C.E. ZINC. 8X35	SCREW T.C.E. ZINC. 8X35
1.20	4		DADO ZINCATO AUTOBL. M10 ALTO DIN982	NUT ZINC. AUTOBLOC. M10
1.21	4		RONDELLA PIANA M10 ZINCATA DIN 125	WASHER PLANT ZINC. M10
1.22	1		SERRATURA	LOCK
1.23	1		SERRATURA NERA	LOCK
1.24	1		SCATOLA ELETTRICA	ELECTRICAL BOX
1.25	20		VITE INOX 5X16 TESTA SVASATATAGLIO CROCE	SCREW

TELAIO - FRAME
Mod: Mark2

KIT 1

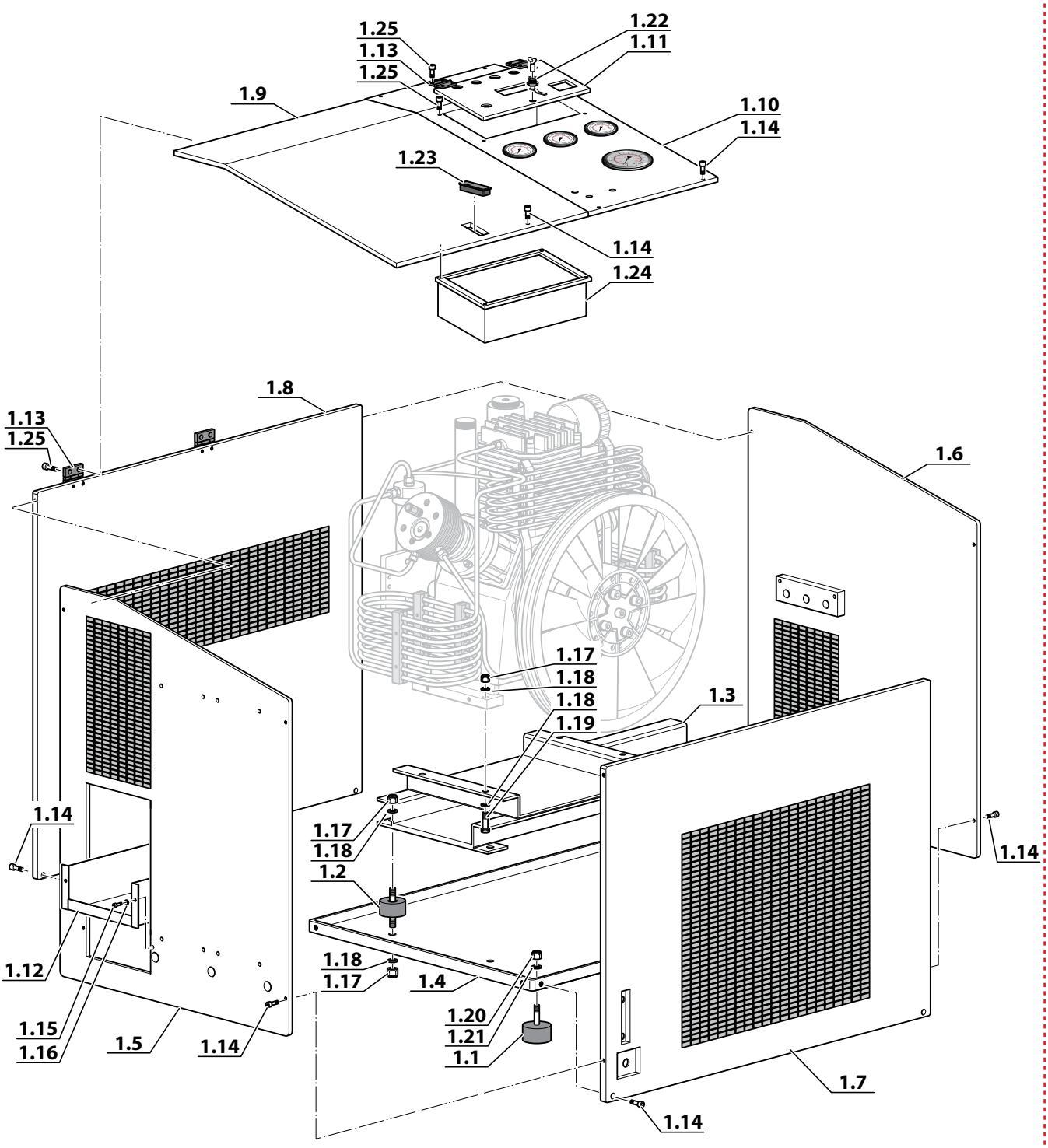

TARGHETTE DI SICUREZZA - SAFETY INFO LABEL

Rif. Pos.	Q.tà Q.ty	Codice Code	Descrizione	Description
KIT1	1	13-10-0003/R	KIT TARGHETTE DI SICUREZZA MCH-13-16	KIT MCH-13-16 SAFETY INFO LABEL
1.1	1		ADESIVO X MCH13-16 SERIE COMPL	INSTRUCTIONS STICKER MCH-13-16
1.2	1		ADESIVO NORME SICUREZZA	SAFETY INFORMATION STICKER
1.3	1		ADESIVO USO	USE STICKER
1.4a	1		ADESIVO PRESSIONE 232 BAR	PRESSURE STICKER 232 BAR
1.4b	1		ADESIVO PRESSIONE 300 BAR	PRESSURE STICKER 300 BAR
1.4c	1		ADESIVO PRESSIONE 330 BAR	PRESSURE STICKER 330 BAR
1.5	1		ADESIVO FORBIDDEN 82X42	FORBIDDEN STICKER 82X42
1.6	1		ADESIVO MCH13 COMPACT EVO 15,5X3,5 ARG. POL.	STICKER MCH13 COMPACT EVO 15,5X3,5 ARG. POL.
1.7	1		ADESIVO OIL LEVEL TRASPARENTE SCRITTA NERA	STICKER OIL LEVEL

TARGHETTE DI SICUREZZA - SAFETY INFO LABEL

KIT1 - 13-10-0003/R

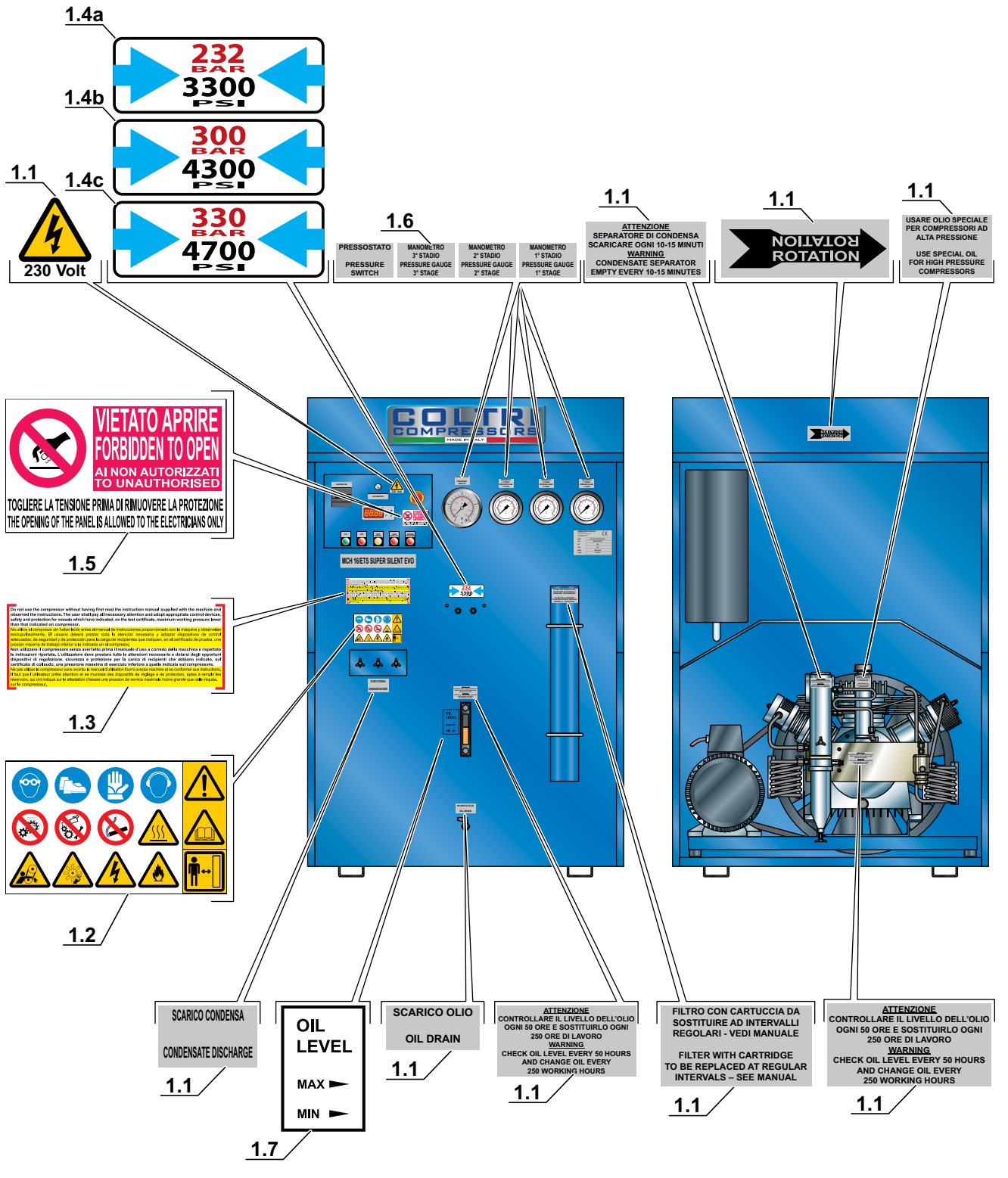

PULEGGIA MOTORE/CINGHIA DI TRASMISSIONE
ENGINE PULLEY/TRANSMISSION BELT

MOTORI ELETTRICI - ELECTRIC MOTOR

Compressore Compressor	Motore - Powered by				Puleggia-Pulley [B]		Codice cinghia-Belt code [A]					
	Tipo Type	Potenza Power [kW]	Tensione Voltage [V]	Frequenza Frequency [Hz]	Ø [mm]	Codice Code [B]	Standard	Compact	Mark	Mini Silent Evo	Super Silent Evo	Ergo
MCH-8 prima 06-2014 before 06-2014	Monofase Single Phase	3	230	50	190	PUL/190/A	CINGA69	CINGA73	X	X	X	CINGA70
				60	140	SC000405	X	X	X	X	X	CINGA69
MCH-8 dopo 06-2014 after 06-2014	Monofase Single Phase	3	230	50	220	13-00-0023	CINGA69	CINGA73	X	X	X	CINGA70
				60	190	PUL/190/A	X	X	X	X	X	CINGA69
MCH-11	Monofase Single Phase	4	230	50	220	SC000406	CINGA70	CINGA70	X	X	X	CINGA72
				60	170	SC000407	CINGA69	CINGA69	X	X	X	CINGA71
MCH-13	Trifase Three Phase	4	230/400	50	220	SC000406	CINGA70	CINGA71	CINGA74	CINGA70	CINGA72	CINGA73
			230/440	60	170	SC000407	CINGA69	CINGA69	CINGA72	CINGA69	CINGA70	CINGA72
MCH-16	Trifase Three Phase	5.5	230/400	50	250	13-00-0024	CINGA73	CINGA73	CINGA75	CINGA73	CINGA73	CINGA75
			230/440	60	190	PUL/190/A	CINGA71	CINGA71	CINGA73	CINGA71	CINGA71	CINGA71
MCH-18	Trifase Three Phase	7.5	230/400	50	260	PUL/260	X	CINGA74	CINGA75	X	CINGA75	CINGA75
			230/440	60	220	SC000406	X	CINGA72	CINGA73	X	CINGA73	CINGA73

MOTORI BENZINA/DIESEL - BENZIN DIESEL ENGINE

Compressore Compressor	Motore - Powered by		Puleggia-Pulley [C]		Codice cinghia-Belt code [A]			
	Tipo Type	Motore Engine	Ø [mm]	Codice Code [C]	Standard	Tech	Mini Tech	Ergo
MCH-13 prima 05-2015 before 05-2015	Honda GX270	Benzina - Benzin	170	PUL/170/A	CINGA78	CINGA78	CINGA78	CINGA77
	Yanmar L100	Diesel - Diesel	170	PUL/170/A	CINGA78	CINGA78	CINGA78	CINGA81
	Honda GX340	Diesel - Diesel	X	X	X	X	X	X
MCH-13 dopo 05-2015 after 05-2015	Honda GX270	Benzina - Benzin	190	PUL/190/A1	CINGA78	CINGA78	CINGA78	CINGA77
	Yanmar L100	Diesel - Diesel	190	PUL/190/A1	CINGA78	CINGA78	CINGA78	CINGA81
	Honda GX340	Diesel - Diesel	X	X	X	X	X	X
MCH-16	Honda GX270	Benzina - Benzin	190	PUL/190/A1	CINGA78	CINGA78	CINGA78	CINGA78
	Yanmar L100	Diesel - Diesel	190	PUL/190/A1	CINGA78	CINGA78	CINGA78	CINGA82
	Honda GX340	Diesel - Diesel	X	X	X	X	X	X
MCH-18	Honda GX270	Benzina - Benzin	X	X	X	X	X	X
	Yanmar L100	Diesel - Diesel	X	X	X	X	X	X
	Honda GX340	Diesel - Diesel	220	PUL/220/2A	X	CINGA79	X	X

PULEGGIA MOTORE/CINGHIA DI TRASMISSIONE
ENGINE PULLEY/TRANSMISSION BELT

MOTORI ELETTRICI - ELECTRIC MOTOR

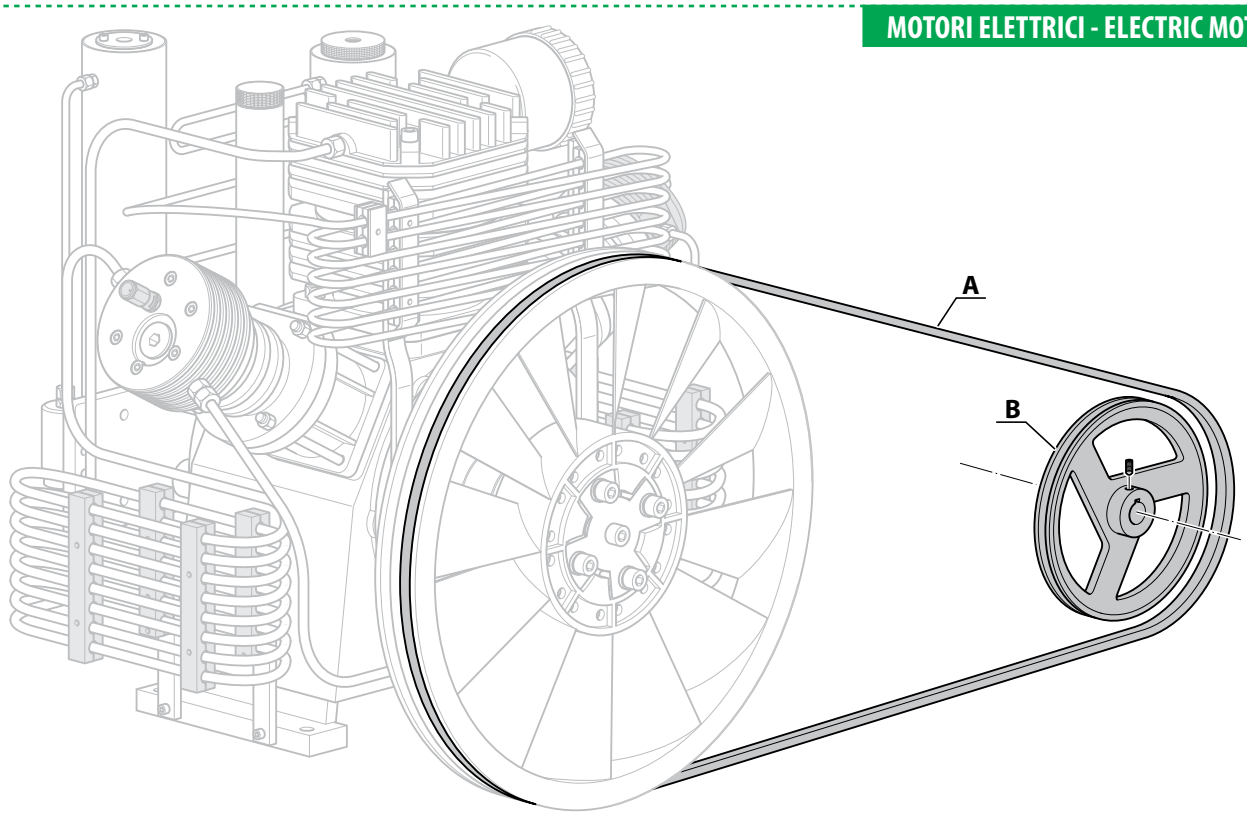

MOTORI BENZINA/DIESEL - DIESEL/BENZIN ENGINE

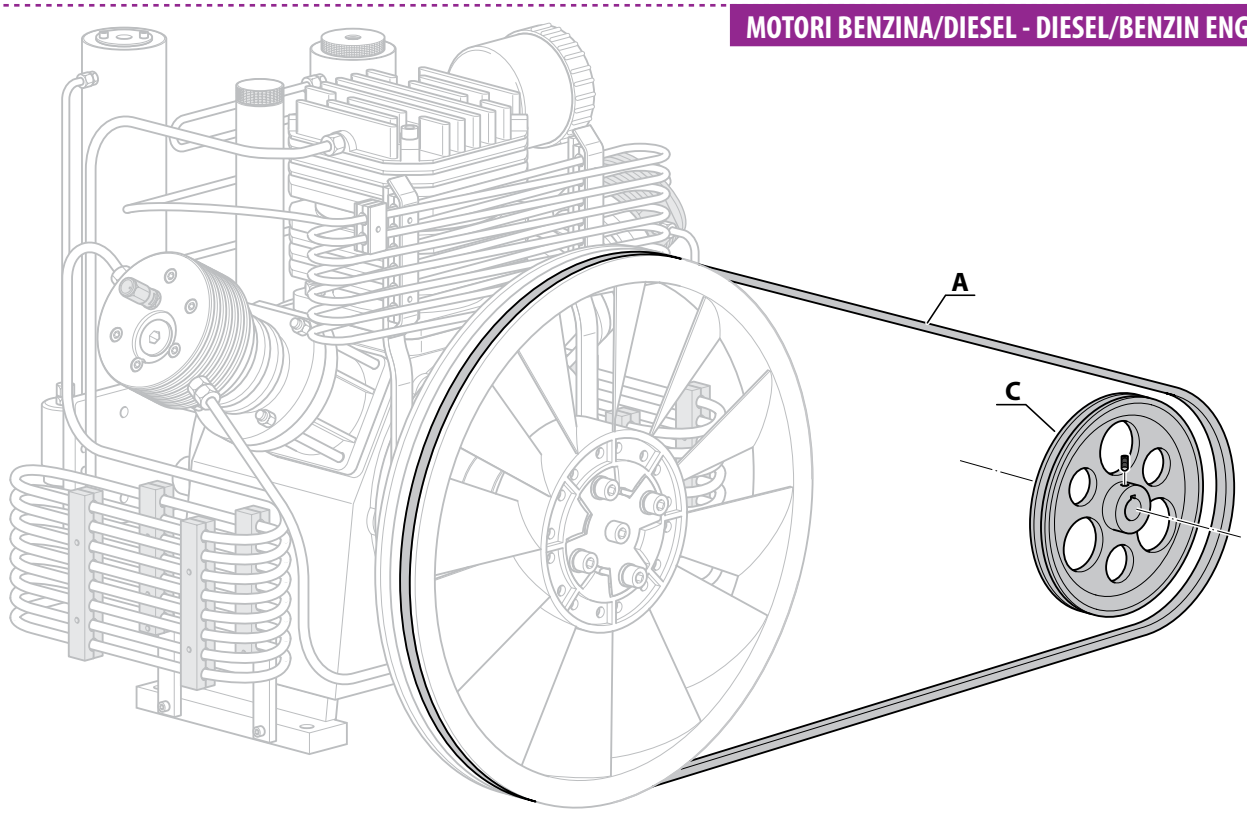

COMPONENTI ELETTRICI - ELECTRICAL COMPONENTS
QUADRO DI COMANDO REMOTO - AUTOMATIC SWITCHBOARD

Rif. Pos.	Q.tà Q.ty	Codice Code	Descrizione	Description
1	1	20-00-0001	PULSANTE VERDE COMPLETO	COMPLETE GREEN PUSH-BUTTON
2	1	20-00-0002	PULSANTE ROSSO COMPLETO	COMPLETE RED PUSH-BUTTON
3	1	20-00-0003	PULSANTE GIALLO COMPLETO	COMPLETE YELLOW PUSH-BUTTON
4	1	20-00-0004	LUCE ROSSA COMPLETA	COMPLETE RED LIGHT
5	1	20-00-0005	PULSANTE DI EMERGENZA COMPLETO	COMPLETE EMERGENCY PUSH-BUTTON
6	1	R38HTRR	TERMOSTATO CABINA	CABIN THERMOSTAT
7	1	63223050	CONTAORE	HOUR METER
8a	1	3RT20261AL20	CONTATTORE LINEA (MCH-8-11)	LINEAR CONTACTOR (MCH-8-11)
8b	1	3RT20251AL20	CONTATTORE LINEA (MCH-13-16-18)	LINEAR CONTACTOR (MCH-13-16-18)
9a	1	3RV20214DA10	INTERRUTTORE PROTEZIONE MOTORE (MCH-8-11)	ENGINE PROTECTION SWITCH (MCH-8-11)
9b	1	3RV20111KA10	INTERRUTTORE PROTEZIONE MOTORE (MCH-13-16)	ENGINE PROTECTION SWITCH (MCH-13-16)
9c	1	3RV20111AA10	INTERRUTTORE PROTEZIONE MOTORE (MCH-18)	ENGINE PROTECTION SWITCH (MCH-18)
10	1	55180020001	FUSIBILE RAPIDO DA 1A CONFEZIONE DA 10PZ	QUICK FUSE 1A PACKAGE FROM 10PZ
11	1	DPA51CM44	SEQUENZA FASI (SOLO VERSIONE EVO)	PHASES SEQUENCE (ONLY EVO VERSION)
12	1	DCB51CM24	TEMPORIZZATORE PAUSA LAVORO	TIMER PAUSE WORK
13	1	20-00-0006	RELÈ AUSILIARIO COMPLETO (SOLO VERSIONE EVO)	COMPLETE AUXILIARY RELAY (ONLY EVO VERSION)
14	1	CFM000631638	TRASFORMATORE 63VA	TRANSFORMER 63VA
15	1	20-00-0007	INTERRUTTORE ON-OFF+ASTA+MANOVRA	ON-OFF SWITCH + SHAFT + HANDLE

ATTACCHI PER RICARICA BOMBOLE - REFILL CONNECTORS
OLIO DI LUBRIFICAZIONE E GRASSO - LUBRICATION OIL AND GREASE

Rif. Pos.	Q.tà Q.ty	Codice Code	Descrizione	Description
1	1	13-04-0238/420/AIR	FRUSTA DI RICARICA DA 1200MM	REFILL HOSE 1200 MM
2	1	SC000460	RUBINETTO BC DIN 300 BAR SCUBA-VVFFUNI	BC VALVE DIN 300
3	1	SC000470	RUBINETTO B.C. DIN 230 BAR	BC VALVE DIN 230
4	1	SC000450	RUBINETTO B.C. INT	BC VALVE INT
5	1	RE100350	RIDUTTORE DIN/INT	CONNECTOR DIN/INT
6	1	SC000460/M/D300/SP	RUBINETTO BC DIN 300 BAR CON MANOMETRO	BC VALVE DIN 300 WITH PRESSURE GAUGE
7	1	SC000430	OLIO PER MOTORE COLTRI SUPER MULTIGRADE 5W40 1L	COLTRI SUPER MULTIGRADE MOTOR OIL 5W40 1L
8	1	SC000496	OLIO SINTETICO COLTRI CE 750 1L	SYNTHETIC COLTRI OIL CE 750 1L
9	1	GRASSO/FGHV	GRASSO SINTETICO ATOSSICO PER TAPPI FILTRO HP	NO-TOXIC SYNTHETIC GREASE FOR CAPS FILTER HP

COMPONENTI ELETTRICI - ELECTRICAL COMPONENTS
QUADRO DI COMANDO REMOTO - AUTOMATIC SWITCHBOARD

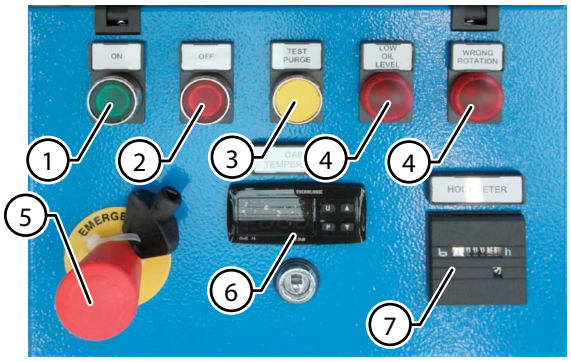

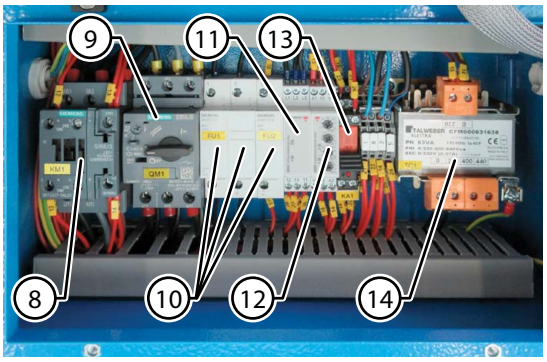

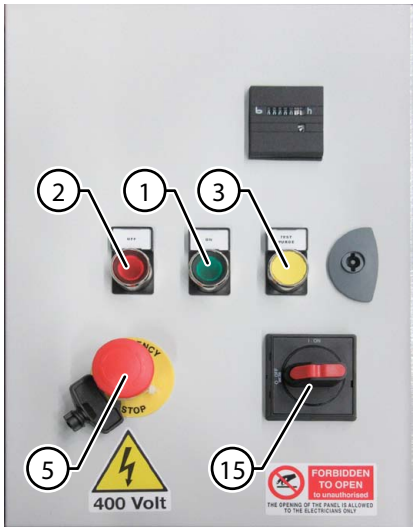

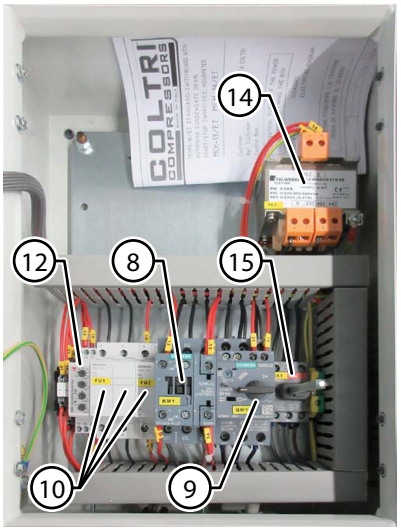

ATTACCHI PER RICARICA BOMBOLE - REFILL CONNECTORS
OLIO DI LUBRIFICAZIONE E GRASSO - LUBRICATION OIL AND GREASE

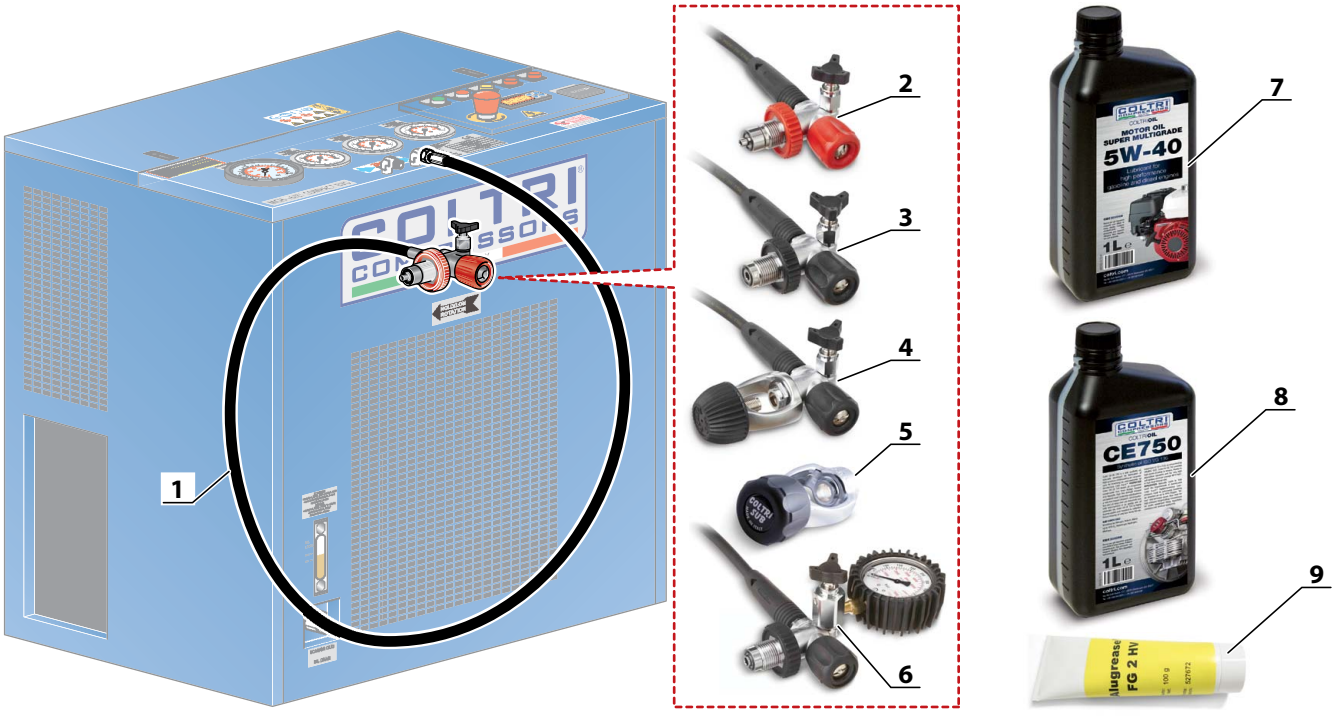

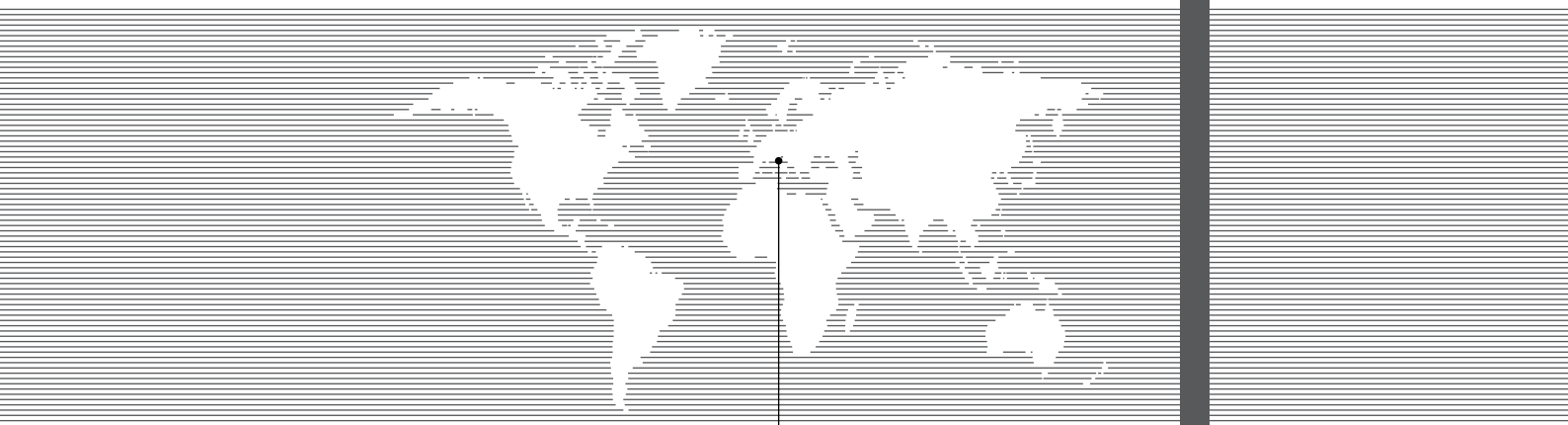

LP-MCH1316-0917

COLTRI COMPRESSORS
MADE IN ITALY

AEROTECNICA COLTRI Spa
Via Colli Storici, 177
25015 DESENZANO DEL GARDA (BS) ITALY
Tel. +39 030 9910301 - Fax. +39 030 9910283
www.coltri.com