Italiano

English

COLTRI COMPRESSORS
MADE IN ITALY

HIGH PRESSURE COMPRESSORS FOR PURE BREATHING AIR AND TECHNICAL GASES
COMPRESSORE AD ALTA PRESSIONE PER ARIA RESPIRABILE E GAS TECNICI

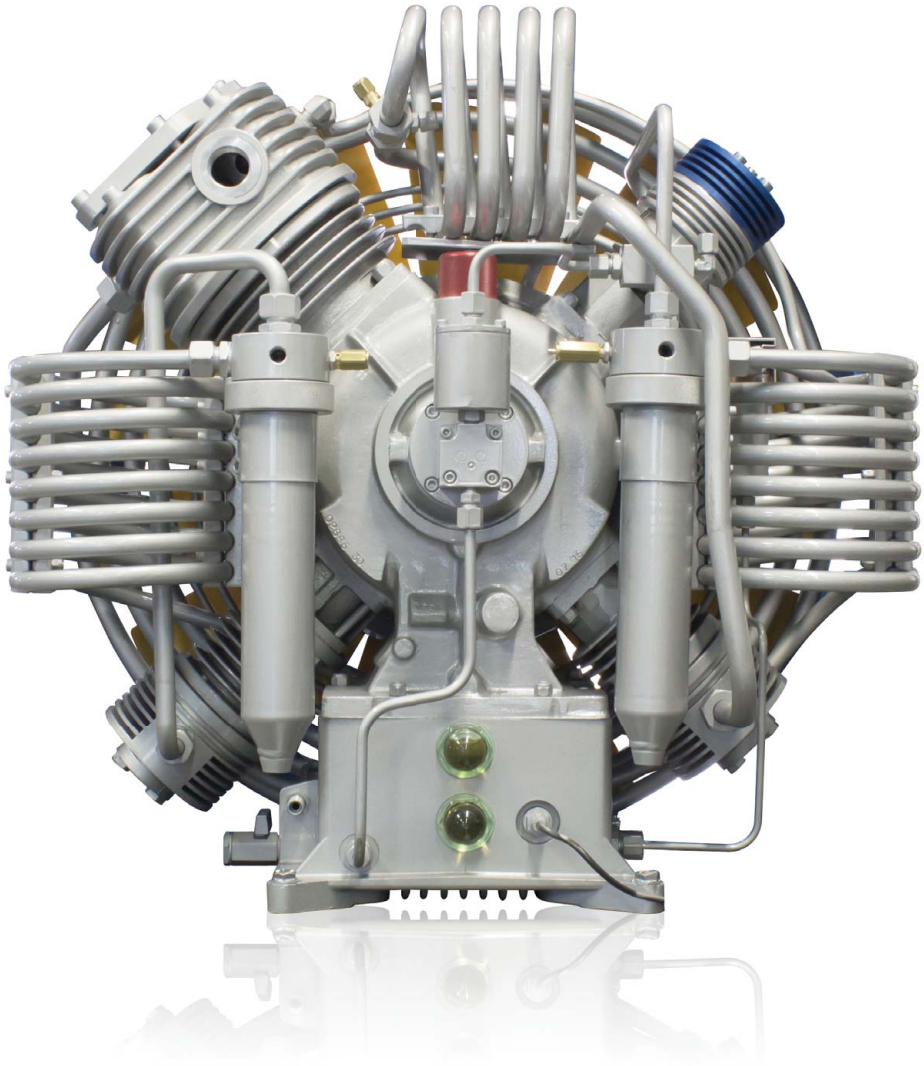

CATALOGO RICAMBI
SPARE PARTS LIST

MCH-22-30-36

I prezzi indicati nel presente listino sono IVA ESCLUSA.
La resa della merce È FRANCO nostra fabbrica - trasporto escluso.
All prices herewith listed are vat excluded.
Delivery terms : ex work our company.

Indice - Index

Tavola	Drawing	Pag.
Monoblocco	Crankcase Assembly	4
Collo d'oca	Crankshaft	6
1° Stadio MCH-22-30	1st Stage MCH-22-30	8
1° Stadio MCH-36	1st Stage MCH-36	10
2° Stadio	2nd Stage	12
3° Stadio	3rd Stage	14
4° Stadio	4th Stage	16
Separatori di condensa	Condensate separator	18
Circuito di Pressione 1°/2° stadio	1st/2nd stage Pressure Circuit	20
Circuito di Pressione 1°/2° stadio MCH-22	1st/2nd stage Pressure Circuit MCH-22	22
Circuito di Pressione 3°/4° stadio	3rd/4th stage Pressure Circuit	24
Circuito di Pressione 3°/4° stadio MCH-22	3rd/4th stage Pressure Circuit MCH-22	26
Circuito di lubrificazione	Lubrication circuit	28
Circuito di utilizzo	Pneumatic circuit	30
Circuito di utilizzo MCH-22	Pneumatic circuit MCH-22	32
Circuito scarico condensa	Condensate discharge circuit	34
Circuito di filtraggio	Filtration circuit	36
Hyperfilter	Hyperfilter	38
Hyperfilter con Presec	Hyperfilter with Presec	40
Valvola di sicurezza	Safety valve	42
Valvola mantenimento pressione	Pressure maintaining valve	42
Carpenteria SILENT	SILENT frame	44
Carpenteria OPEN	OPEN frame	46
Targhette di sicurezza	Safety info labels	48
Quadro elettrico	Electrical board	50
Puleggia motore/Cinghia di trasmission	Engine pulley/Transmission belt	50
Guarnizioni gruppo pompante	Gaskets pumping group	52
Attacchi per ricarica bombole	Bottle refill connectors	54
Olio di lubrificazione	Lubrication oil	54

Distinta List	Modello Model	Codice Code
GRUPPO POMPANTE PUMPING GROUP	**MCH-22**	**SC000303**
	MCH-30	**SC000253**
	MCH-36	**SC000299**

I dati riportati nel presente catalogo non sono impegnativi. AEROTECNICA COLTRI SpA si riserva di modificare i dati in qualsiasi momento.
AEROTECNICA COLTRI SpA reserves the right of amending the data contained in this catalogue at any time.

MONOBLOCCO - CRANKCASE ASSEMBLY

Rif. Pos.	Q.tà Q.ty	Codice Code	Descrizione	Description
KIT1	1	36-00-004/R	KIT MONOBLOCCO	CRANKCASE KIT
1.1	1	36-00-004	MONOBLOCCO MCH-36	CRANKCASE MCH-36
1.2	1	36-00-012	TAPPO CARICO OLIO MCH-36	OIL FILLER TAP
1.3	1	36-00-013	O-RING 4125 NBR90SH (31.34X3.53)	O-RING 4125 NBR90SH (31.34X3.53)
1.4	4	36-01-007	VITE PRIGIONIERA M10X40-8.8	TIE ROD M10X40-8.8
1.5	4	36CAR007	DADO AUTOBLOCC.M10 ZINCATO	SELF-LOCKING NUT M10
1.6	14	36-00-002	VITE PRIGIONIERA M8X42-8.8	TIE ROD M8X42-8.8
1.7	19	13-00-0101	DADO AUTOBLOCC.M8 ZINCATO	SELF-LOCKING NUT M8
1.8	4	36-03-010	VITE PRIGIONIERA M8X90-8.8	TIE ROD M8X90-8.8
1.9	7	36-00-005	RONDELLA Ø8	WASHER Ø8
1.10	1	36-00-003	GUARNIZIONE BASAMENTO MONOBLOCCO	GASKET CRANKCASE-BASE
1.11	1	PRIM8/35	VITE PRIGIONIERA M8X35 D00115	TIE ROD M8X35
1.12	1	13-00-0055	ANELLO ELASTICO SEEGER J 62 DIN 472	SEEGER J 62 DIN 472
1.13	1	13-00-0042	CUSCINETTO RULLI FLANGIA NU305ECP (25X62X17)	BEARING NU305ECP (25X62X17)
1.14	1	36-00-034	GUARNIZIONE FLANGIA MONOBLOCCMCH36	GASKET CRANKCASE FLANGE
1.15	6	36-00-035	VITE TCEIZN M8X35-8.8	SCREW TCEIZN M8X35-8.8
KIT2a	1	36-00-001/R	KIT NUOVO BASAMENTO MONOBLOCCO	NEW CRANKCASE BASE KIT
2.1	1	36-00-001/	NUOVO BASAMENTO MONOBLOCCO	NEW CRANKCASE BASE
2.2	1	36-00-003	GUARNIZIONE BASAMENTO MONOBLOCCO	GASKET CRANKCASE-BASE
2.3	7	13-00-0101	DADO AUTOBLOCC.M8 ZINCATO	SELF-LOCKING NUT M8
2.4	7	36-00-005	RONDELLA Ø8	WASHER Ø8
2.5	1	PRIM8/35	VITE PRIGIONIERA M8X35 D00115	TIE ROD M8X35
2.6	6	36-00-002	VITE PRIGIONIERA M8X42-8.8	TIE ROD M8X42-8.8
2.7	1	13-00-0053	GUARNIZIONE RAME 21,5X28X1,5	COPPER WASHER 21,5X28X1,5
2.8	1	13-00-0063	TAPPO SCARICO OLIO	OIL DRAIN PLUG
2.9	1	36-00-011	RUBINETTO SCARICO OLIO	OIL DRAIN TAP
2.10	1	SC000334	SENSORE LIVELLO OLIO	OIL LEVEL SWITCH
2.11	2	13-00-0068	VISORE LIVELLO OLIO CON GUARNIZIONE	OIL LEVEL VIEWER WITH GASKET
KIT3	1	36-00-033/R	KIT FLANGIA MONOBLOCCO	CRANKCASE FLANGE KIT
3.1	1	36-00-033	FLANGIA MONOBLOCCO	CRANKCASE FLANGE
3.2	1	36-00-034	GUARNIZIONE FLANGIA MONOBLOCCO MCH36	GASKET CRANKCASE FLANGE
3.3	6	36-00-035	VITE TCEIZN M8X35-8.8	SCREW TCEIZN M8X35-8.8
3.4	1	36-00-036	SEEGER AK 40	SEEGER AK 40
3.5	1	36-00-039	PARAOLIO/ANELLO DI TENUTA A 40X55X7 NBR	OIL SPLASH GUARD A 40X55X7 NBR
3.6	1	OR-2250	O RING 2250 NBR90SH(63,22X1,78)	O RING 2250 NBR90SH(63,22X1,78)
3.7	1	36-00-037	FLANGIA LATO VENTOLA	FAN SIDE FLANGE
3.8	4	36-00-040	VITE AUTOFILETTANTE	SELF-TAPPING SCREW
KIT4	1	36-00-041/R	KIT PULEGGIA VENTOLA	FAN PULLEY KIT
4.1	1	36-00-041	PULEGGIA VENTOLA DI RAFFREDD. MCH36	FAN PULLEY
4.2	1	36-00-046	RONDELLA PULEGGIA VENTOLA	FAN PULLEY WASHER
4.3	1	13-00-0079	RONDELLA PIANA M12 ZINCATA (12,5X24X2,5)	WASHER PLANT M12 (12,5X24X2,5)
4.4	1	36CAR034	VITE TEZN M12X40-8.8	SCREW TEZN M12X40-8.8
4.5	12	VITE0616	VITE T.C.E. ZINC. 6X16 DIN912	SCREW T.C.E. ZINC. 6X16 DIN912
4.6	12	36-00-044	RONDELLA Ø6	WASHER Ø6
4.7	18	36-00-043	PALA VENTOLA	FAN BLADE
4.8	6	36-00-042	STAFFA PALE VENTOLA	FAN BLADE STAY
KIT5*	1	36-00-043/R	KIT PALA VENTOLA NUOVA	NEW FAN BLADE KIT
5.1	3	36-00-043	PALA VENTOLA NUOVA	NEW FAN BLADE
5.2	1	36-00-042	STAFFA PALE VENTOLA	FAN BLADE STAY

* = Il kit comprende una staffa e 3 pale gialle nuove, per la sostituzione completa bisogna ordinare 6 kit
* = *The kit includes a bracket and 3 new yellow fan blade, for complete replacing must order 6 kits*

MONOBLOCCO - CRANKCASE ASSEMBLY

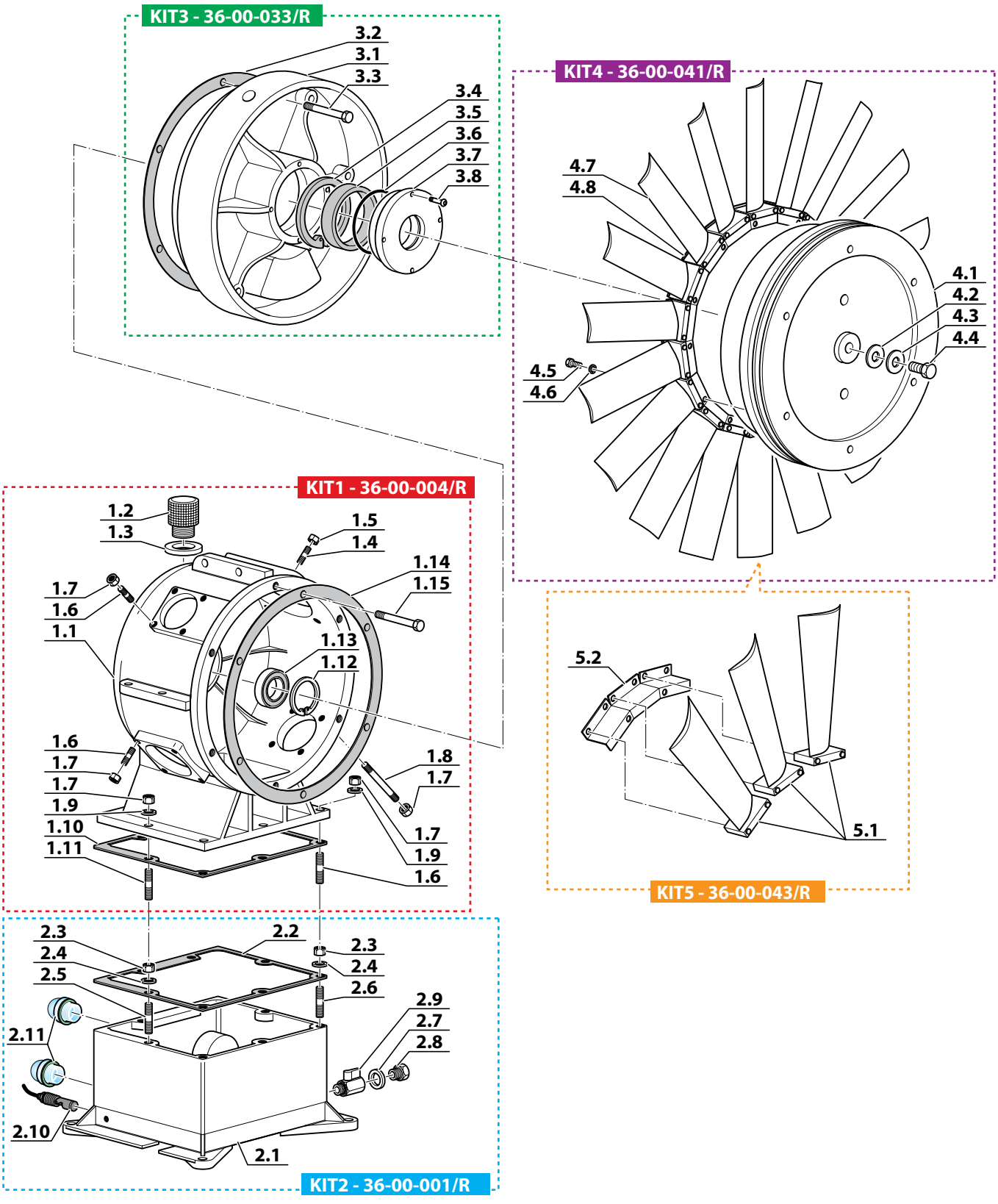

COLLO D'OCA - CRANKSHAFT

Rif. Pos.	Q.tà Q.ty	Codice Code	Descrizione	Description
KIT1	1	36-00-024/R	KIT COLLO D'OCA + BIELLE	CRANKSHAFT + CONNECTING ROD KIT
1.1	1	36-00-025	CONTRAPPESO	COUNTERWEIGHT
1.2	1	13-00-0101	DADO M8	NUT Ø8
1.3	1	13-00-0104	VITE TCEIZN M8X65-8.8	SCREW TCEIZN M8X65-8.8
1.4	1	36-00-024	COLLO D'OCA	CRANKSHAFT
1.5	1	36-00-027	LINGUETTA	SPLINE
1.6	1	36-00-032	SEEGER	SNAP RING
1.7	1	36-00-031	CUSCINETTO	BEARING
1.8	1	36-00-030	DISTANZIALE COLLO D'OCA	CRANKSHAFT SPACER
1.9	1	36-00-029	SEEGER	SNAP RING
1.10	1	36-00-028	CUSCINETTO	BEARING
1.11	4	36-00-017	CUSCINETTO BIELLA NUP206 EC/C4	CONNECTING ROD BEARING NUP206 EC/C4
1.12	4	36-00-019	RALLA 30X42X0,5 MCH36	FIFTH WHEEL 30X42X0,5 MCH36
1.13	1	36-00-022	BIELLA 2°STADIO MCH-36	2ND STAGE CONNECTING ROD MCH-36
1.14	1	36-00-023	CUSCINETTO SPINOTTO BIELLA 2°STADIO	2ND STAGE CONNECTING ROD PIN BEARING
1.15	1	36-00-021	CUSCINETTO SPINOTTO BIELLA 1°STADIO	1ST STAGE CONNECTING ROD PIN BEARING
1.16	1	36-00-020	BIELLA 1° STADIO MCH-36	1ST STAGE CONNECTING ROD MCH-36
1.17	1	36-00-018	CUSCINETTO SPINOTTO BIELLA 3°/4°STADIO	3RD/4TH STAGE CONNECTING ROD PIN BEARING
1.18	1	36-00-016	BIELLA 3°/4°STADIO	3RD/4TH STAGE CONNECTING ROD

COLLO D'OCA - CRANKSHAFT

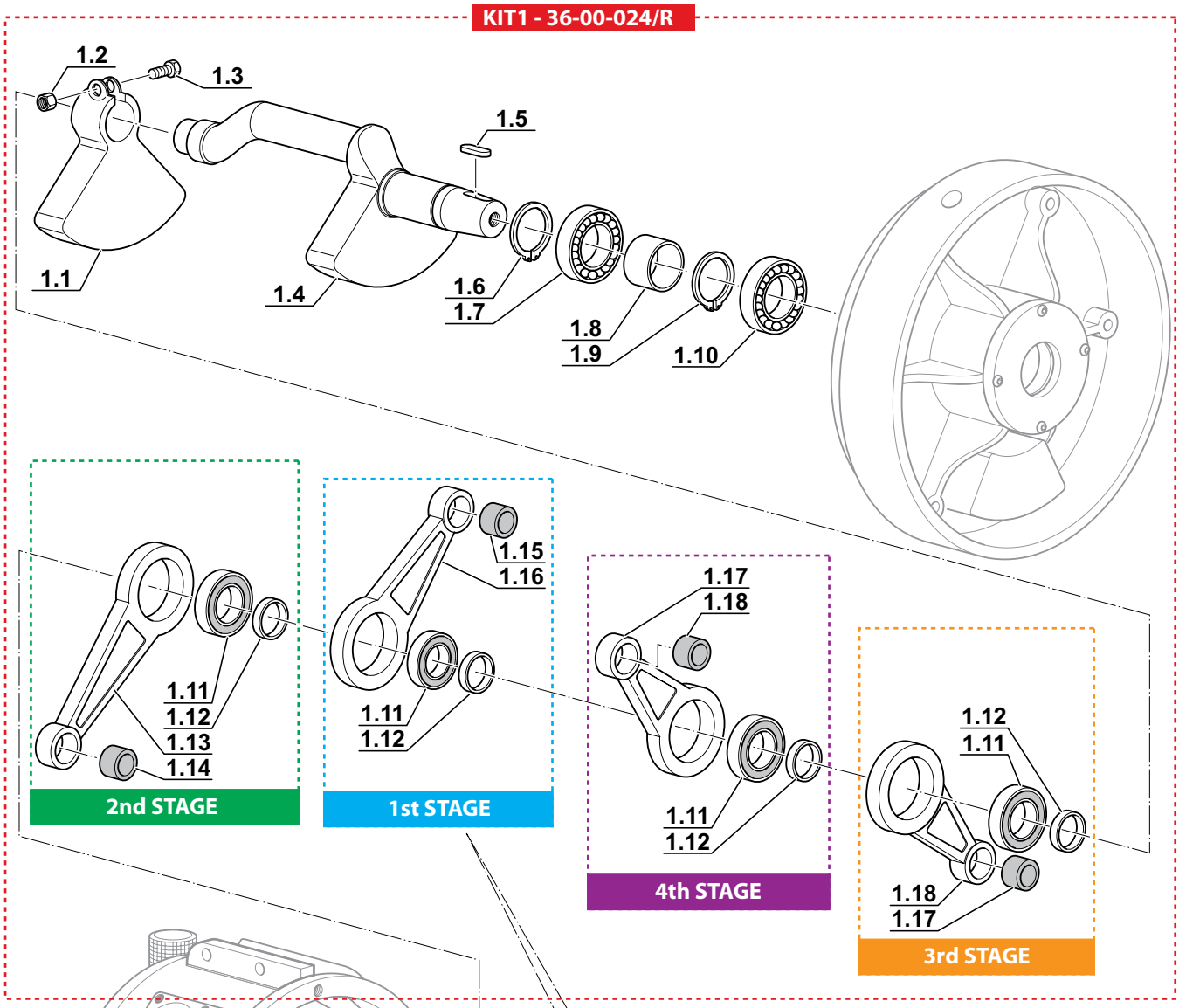

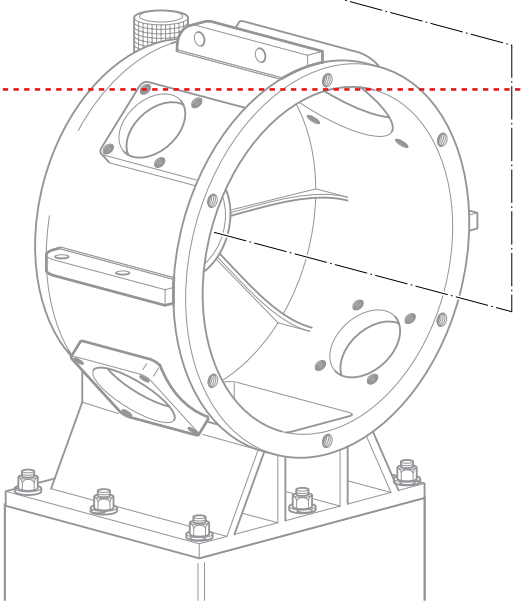

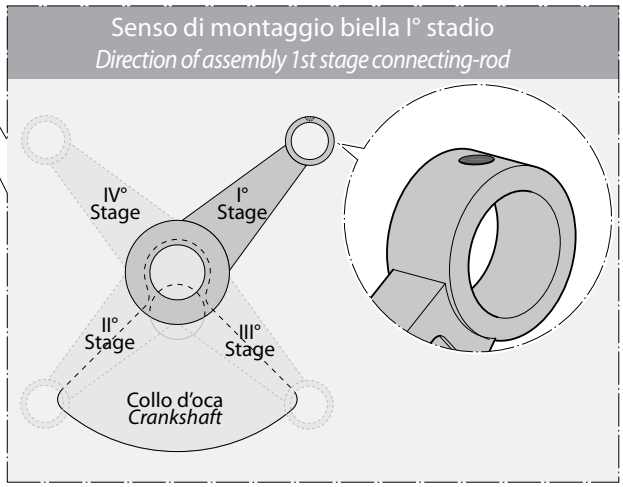

1° STADIO MCH-22-30 - 1st STAGE MCH-22-30

Rif. Pos.	Q.tà Q.ty	Codice Code	Descrizione	Description
KIT1	1	36-05-0503/K	KIT FILTRO ASPIRAZIONE	KIT INTAKE FILTER
1.1	1	36-05-0504	CARTUCCIA FILTRO ASPIRAZIONE	INTAKE FILTER CARTRIDGE
1.2	1		MANICOTTO FILTRO ASPIRAZIONE	INTAKE FILTER PIPE
1.3	1		O-RING FILTRO ASPIRAZIONE MCH-30-36	O-RING INTAKE FILTER MCH-30-36
KIT2	1	30-01-001/R	KIT PISTONE 1° STADIO	KIT 1ST STAGE PISTON
2.1	1		PISTONE 1° STADIO DIAM.120 MCH30	1ST STAGE PISTON 120MM
2.2	1		SPINOTTO PISTONE DIAM. 120 PRIMO STADIO MCH24	1ST STAGE PISTON PIN 120MM
2.3	2		SEEGER/ANELLO ELAST.SPIN.PIST.	SEEGER RETAINING RING
2.4	1	24-01-0118	SERIE FASCE ELASTICHE 1° STADIO DIAM. 120 MCH24	1ST STAGE PISTON RINGS (3) 120MM
KIT3	1	24-01-006/R	KIT CILINDRO 1° STADIO DIAM.120	1ST STAGE CYLINDER 120MM KIT
3.1	1		O-RING 2525 NBR90SH(133,10X1,78)	O-RING 2525 NBR90SH(133,10X1,78)
3.2	1		CILINDRO 1° STADIO DIAM.120	1ST STAGE CYLINDER 120MM
3.3	4		VITE PRIGIONIERA M10X40-8.8	STUD SCREW M10X40-8.8
3.4	4		DADO M10 AUTOBLOCCANTE	NUT M10
3.5	1		GUARNIZIONE TESTA 1° ST. MCH24 120MM	HEAD GASKET 1ST STAGE MCH24 120MNM
3.6	1		KIT PISTONE 1° STADIO	KIT 1ST STAGE PISTON
KIT4	1	30-01-010/R	KIT TESTATA 1°STADIO MCH-30	1ST STAGE HEAD MCH-30 KIT
4.1	1		GUARNIZIONE TESTA 1° ST. MCH24 120MM	HEAD GASKET 1ST STAGE MCH24 120MNM
4.2	1		TESTATA 1°STADIO	1ST STAGE HEAD
4.3	2		RONDELLA RAME 65X70X1	COPPER WASHER 65X70X1
4.4	2		O-RING 3256 VITON90SH VERDE (64,77X2,62)	O-RING 3256 VITON90SH GREEN (64,77X2,62)
4.5	4		RONDELLA Ø10	WASHER Ø10
4.6	4		VITE TCEIZN M10X120-8.8	SCREW TCEIZN M10X120-8.8
4.7	1		COPERCHIO CAMPANE VALVOLE 1°STADIO	1ST STAGE VALVES BELLS COVER
4.8	4		VITE TCEIZN M10X35-8.8	SCREW TCEIZN M10X35-8.8
KIT5	1	36-01-021/R	KIT VALVOLA ASPIRAZIONE 1°STADIO	1ST STAGE INTAKE VALVE KIT
5.1	1		RONDELLA RAME 65X70X1	COPPER WASHER 65X70X1
5.2	1	36-01-021	VALVOLA ASPIRAZIONE 1°STADIO	1ST STAGE INTAKE VALVE
5.3	1		CAMPANA VALVOLA ASPIRAZIONE 1°STADIO	1ST STAGE INTAKE VALVE BELL
5.4	1		O-RING 3256 VITON90SH VERDE (64,77X2,62)	O-RING 3256 VITON90SH GREEN (64,77X2,62)
KIT6	1	36-01-024/R	KIT VALVOLA SCARICO 1°STADIO	1ST STAGE DISCHARGE VALVE KIT
6.1	1		RONDELLA RAME 65X70X1	COPPER WASHER 65X70X1
6.2	1	36-01-024	VALVOLA SCARICO 1°STADIO	1ST STAGE DISCHARGE VALVE
6.3	1		CAMPANA VALVOLA SCARICO 1°STADIO	1ST STAGE DISCHARGE VALVE BELL
6.4	1		O-RING 3256 VITON90SH VERDE (64,77X2,62)	O-RING 3256 VITON90SH GREEN (64,77X2,62)

1° STADIO MCH-22-30 - 1st STAGE MCH-22-30

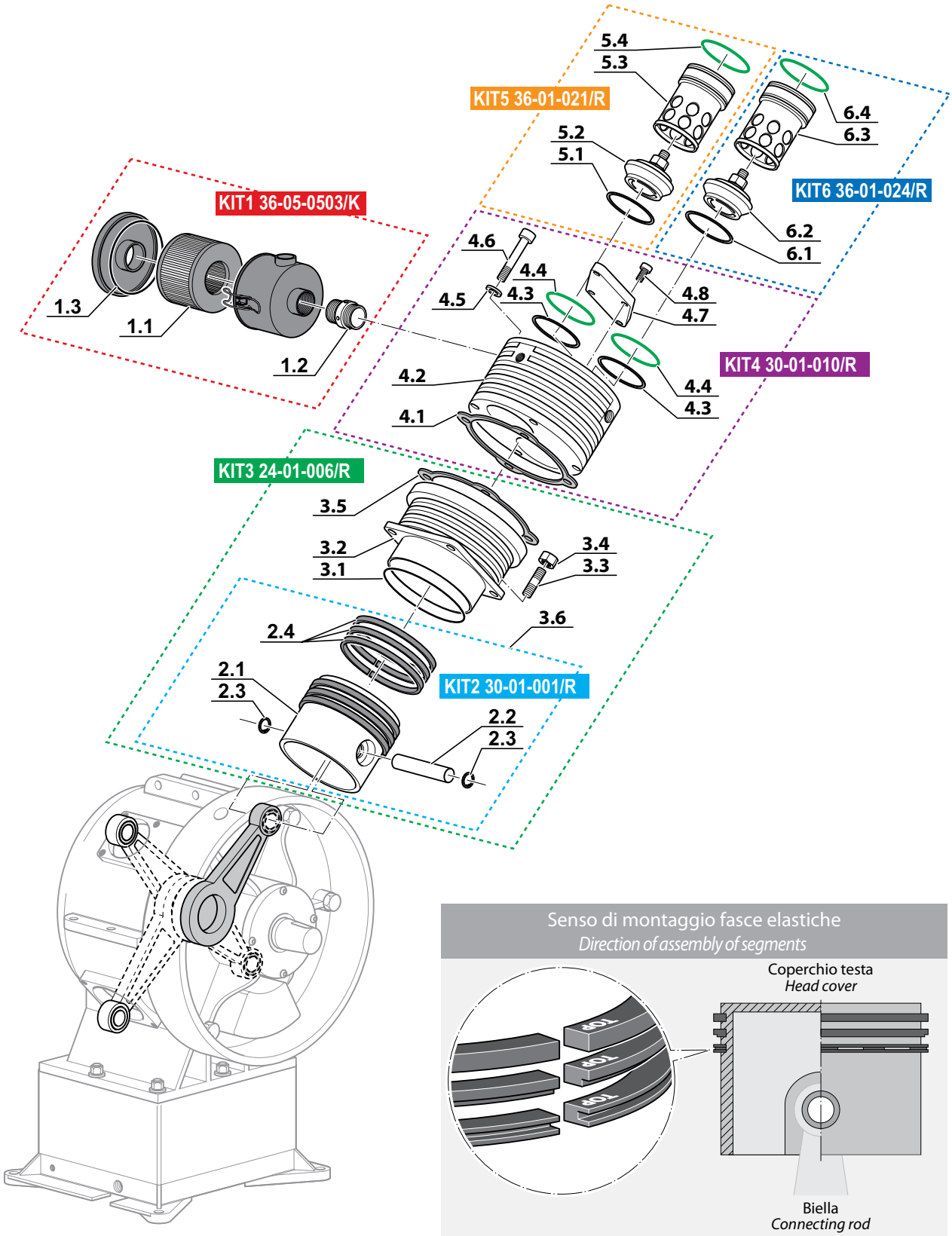

Senso di montaggio fasce elastiche
Direction of assembly of segments

1° STADIO MCH-36 - 1st STAGE MCH-36

Rif. Pos.	Q.tà Q.ty	Codice Code	Descrizione	Description
KIT1	1	36-05-0503/K	KIT FILTRO ASPIRAZIONE	KIT INTAKE FILTER
1.1	1	36-05-0504	CARTUCCIA FILTRO ASPIRAZIONE	INTAKE FILTER CARTRIDGE
1.2	1		MANICOTTO FILTRO ASPIRAZIONE	INTAKE FILTER PIPE
1.3	1		O-RING FILTRO ASPIRAZIONE MCH-30-36	O-RING INTAKE FILTER MCH-30-36
KIT2	1	36-01-001/R	KIT PISTONE 1° STADIO MCH36 130MM	KIT 1ST STAGE PISTON 130MM
2.1	1		PISTONE 1° STADIO DIAM.130	1ST STAGE PISTON 130MM
2.2	1		SPINOTTO PISTONE 1° ST B20X13X102X1 130MM	1ST STAGE PISTON PIN 130MM MCH36
2.3	2		SEEGER/ANELLO ELAST.SPIN.PIST.	SEEGER RETAINING RING
2.4	1	36-01-004	SERIE N°3 SEGMENTI PISTONE 130MM	1ST STAGE PISTON RINGS (3) 130MM MCH36
KIT3	1	36-01-006/R	KIT CILINDRO 1° STADIO DIAM.130 MCH 36	1ST STAGE CYLINDER 130MM KIT
3.1	1		O-RING 2525 NBR90SH(133,10X1,78)	O-RING 2525 NBR90SH(133,10X1,78)
3.2	1		CILINDRO 1° STADIO DIAM.130 MCH 36	1ST STAGE CYLINDER 130MM
3.3	4		VITE PRIGIONIERA M10X40-8.8	STUD SCREW M10X40-8.8
3.4	4		DADO M10 AUTOBLOCCANTE	NUT M10
3.5	1		GUARNIZIONE TESTA 1° ST. DIAM 130MM	HEAD GASKET 1ST STAGE M-36 130MNM
3.6	1		KIT PISTONE 1° STADIO MCH36 130MM	KIT 1ST STAGE PISTON 130MM
KIT4	1	36-01-010/R	KIT TESTATA 1°STADIO MCH-36	1ST STAGE HEAD MCH-36 KIT
4.1	1		GUARNIZIONE TESTA 1° ST. DIAM 130MM	HEAD GASKET 1ST STAGE M-36 130MNM
4.2	1		TESTATA 1°STADIO	1ST STAGE HEAD
4.3	2		RONDELLA RAME 65X70X1	COPPER WASHER 65X70X1
4.4	2		O-RING 3256 VITON90SH VERDE (64,77X2,62)	O-RING 3256 VITON90SH GREEN (64,77X2,62)
4.5	4		RONDELLA Ø10	WASHER Ø10
4.6	4		VITE TCEIZN M10X120-8.8	SCREW TCEIZN M10X120-8.8
4.7	1		COPERCHIO CAMPANE VALVOLE 1°STADIO	1ST STAGE VALVES BELLS COVER
4.8	4		VITE TCEIZN M10X35-8.8	SCREW TCEIZN M10X35-8.8
KIT5	1	36-01-021/R	KIT VALVOLA ASPIRAZIONE 1°STADIO	1ST STAGE INTAKE VALVE KIT
5.1	1		RONDELLA RAME 65X70X1	COPPER WASHER 65X70X1
5.2	1	36-01-021	VALVOLA ASPIRAZIONE 1°STADIO	1ST STAGE INTAKE VALVE
5.3	1		CAMPANA VALVOLA ASPIRAZIONE 1°STADIO	1ST STAGE INTAKE VALVE BELL
5.4	1		O-RING 3256 VITON90SH VERDE (64,77X2,62)	O-RING 3256 VITON90SH GREEN (64,77X2,62)
KIT6	1	36-01-024/R	KIT VALVOLA SCARICO 1°STADIO	1ST STAGE DISCHARGE VALVE KIT
6.1	1		RONDELLA RAME 65X70X1	COPPER WASHER 65X70X1
6.2	1	36-01-024	VALVOLA SCARICO 1°STADIO	1ST STAGE DISCHARGE VALVE
6.3	1		CAMPANA VALVOLA SCARICO 1°STADIO	1ST STAGE DISCHARGE VALVE BELL
6.4	1		O-RING 3256 VITON90SH VERDE (64,77X2,62)	O-RING 3256 VITON90SH GREEN (64,77X2,62)

1° STADIO MCH-36 - 1st STAGE MCH-36

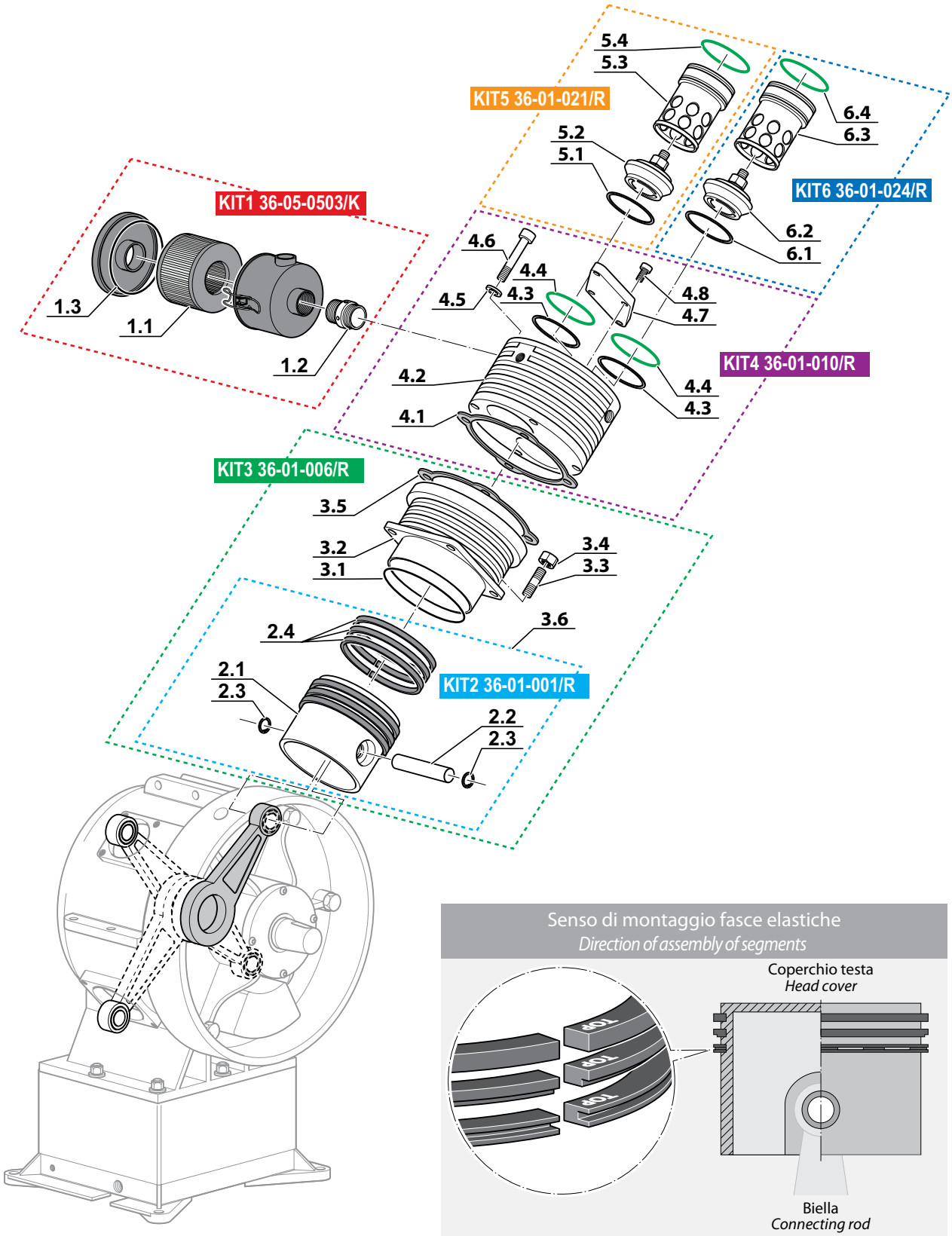

Senso di montaggio fasce elastiche
Direction of assembly of segments

2° STADIO - 2nd STAGE

Rif. Pos.	Q.tà Q.ty	Codice Code	Descrizione	Description
KIT1	1	36-02-001/R	KIT PISTONE 2° STADIO	KIT 2ND STAGE PISTON
1.1	1		PISTONE 2° STADIO DIAM.60 6034	2ND STAGE PISTON 60MM MCH36
1.2	1		SPINOTTO PISTONE 2°STADIO	2ND STAGE PISTON PIN
1.3	2		SEEGER	SNAP RING
1.4	4	36-02-004	SERIE N°4 SEGMENTI PISTONE 2°STADIO	SERIES N°4 SEGMENTS 2ND STAGE PISTON
KIT2	1	36-02-006/R	KIT CILINDRO 2°STADIO	2ND STAGE CYLINDER KIT
2.1	1		O-RING 2275 NBR90SH (69.57X1.78)	O-RING 2275 NBR90SH (69.57X1.78)
2.2	1		CILINDRO 2° STADIO Ø60 MCH-36	2ND STAGE CYLINDER Ø60 MCH-36
2.3	4		VITE PRIGIONIERA M8X42-8.8	STUD SCREW M8X42-8.8
2.4	4		DADO M8 AUTOBLOCCANTE	NUT M8
2.5	6		VITE T.C.E. ZINCATA 8X30	SCREW T.C.E. ZINCATA 8X30
2.6	1		KIT PISTONE 2° STADIO	KIT 2ND STAGE PISTON
KIT3	1	36-02-009/R	KIT TESTATA 2°/3°STADIO	2ND/3RD STAGE HEAD KIT
3.1	1		TESTATA 2°/3°STADIO	2ND/3RD STAGE HEAD
3.2	6		VITE T.C.E. ZINCATA 8X30	SCREW T.C.E. ZINCATA 8X30
3.3	2		RONDELLA RAME 28X34X1	COPPER WASHER 28X34X1
3.4	2		O-RING 4112 VITON90SH (28.17X3.53)	O-RING 4112 VITON90SH (28.17X3.53)
3.5	1		O RING 2112 VITON 90SH VERDE	O RING 2112 VITON 90SH GREEN
3.6	1		COPERCHIO CAMPANE VALVOLE 2°/3°STADIO	2ND/3RD STAGEVALVES BELL COVER
3.7	2		RONDELLA Ø10	WASHER Ø10
3.8	2		VITE TEZN M10X35-8.8	SCREW TEZN M10X35-8.8
KIT4	1	36-02-012/R	KIT VALVOLA ASPIRAZIONE 2°STADIO	2ND STAGE INTAKE VALVE KIT
4.1	1		RONDELLA RAME 28X34X1	COPPER WASHER 28X34X1
4.2	1	36-02-012	VALVOLA ASPIRAZIONE 2°STADIO	2ND STAGE INTAKE VALVE
4.3	1		CAMPANA VALVOLA ASPIRAZIONE 2°/3°STADIO	2ND/3RD STAGE INTAKE VALVE BELL
4.4	1		O-RING 4112 VITON90SH (28.17X3.53)	O-RING 4112 VITON90SH (28.17X3.53)
KIT5	1	36-02-015/R	KIT VALVOLA SCARICO 2°STADIO	2ND STAGE DISCHARGE VALVE KIT
5.1	1		RONDELLA RAME 28X34X1	COPPER WASHER 28X34X1
5.2	1	36-02-015	VALVOLA SCARICO 2°STADIO	2ND STAGE DISCHARGE VALVE
5.3	1		CAMPANA VALVOLA SCARICO 2°/3°STADIO	2ND/3RD STAGE DISCHARGE VALVE BELL
5.4	1		O-RING 4112 VITON90SH (28.17X3.53)	O-RING 4112 VITON90SH (28.17X3.53)
5.5	1		O RING 2112 VITON 90SH VERDE	O RING 2112 VITON 90SH GREEN

2° STADIO - 2nd STAGE

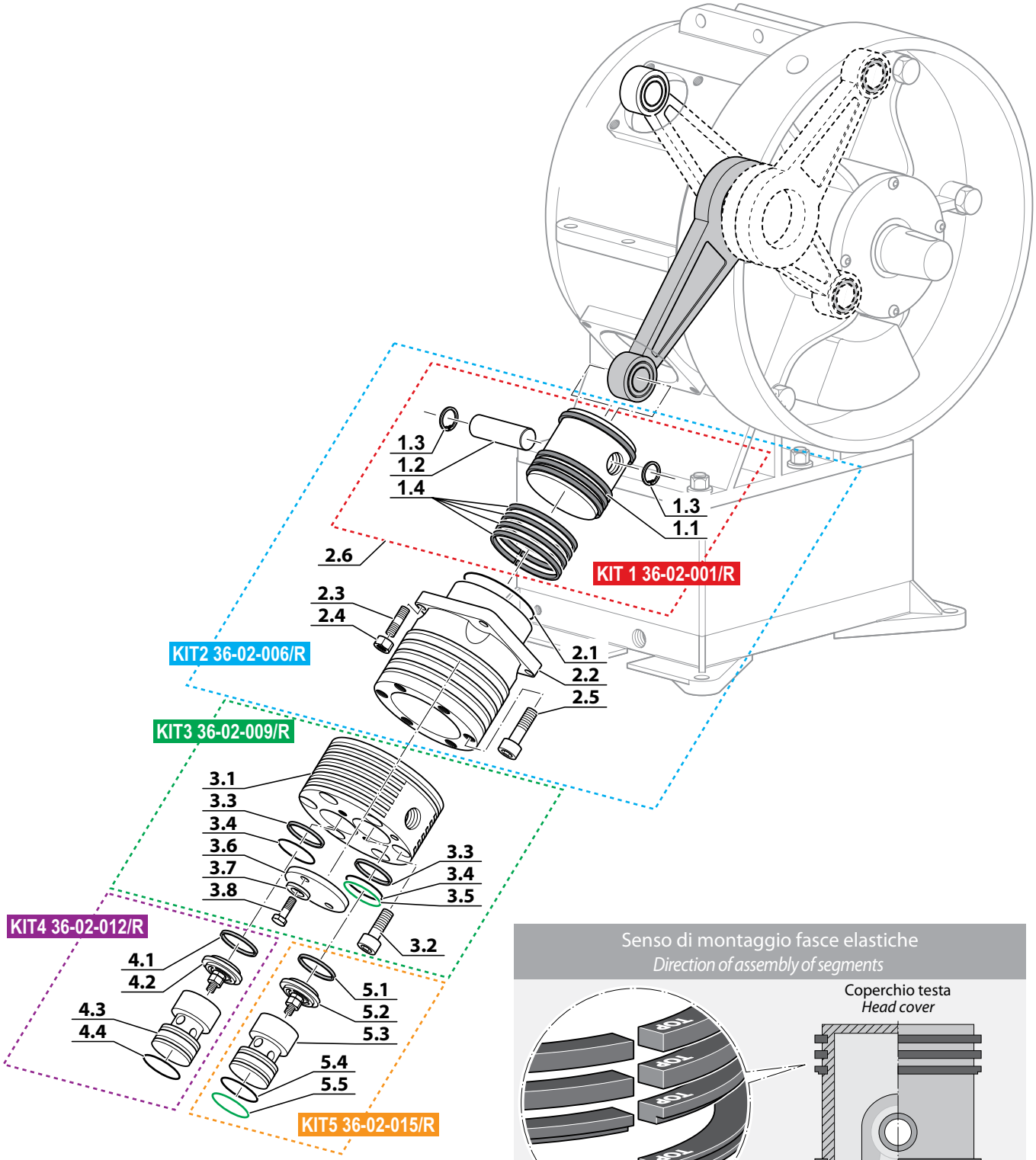

Senso di montaggio fasce elastiche
Direction of assembly of segments

3° STADIO - 3rd STAGE

Rif. Pos.	Q.tà Q.ty	Codice Code	Descrizione	Description
KIT1	1	36-03-006/R	KIT PATTINO+PISTONE 3° STADIO MCH36	KIT 3RD STAGE PAD+PISTON MCH36
1.1	1		PATTINO 3°/4°STADIO Ø60 MCH36	3RD/4TH STAGE PAD Ø60 MCH36
1.2	1		SPINOTTO PISTONE 3°/4° STADIO B22X48 PIENO	3RD/4TH STAGE PISTON PIN B22X48
1.3	2		SEEGER	SNAP RING
1.4	1		PISTONE 3° STADIO Ø32 MCH36 P32516	3RD STAGE PISTON Ø32 MCH36
1.5	1	36-03-007	SERIE N°4 SEGMENTI PISTONE 3°STADIO	SERIES N°4 SEGMENTS 3RD STAGE PISTON
KIT2	1	36-03-005/R	KIT CILINDRO GUIDA 3° STADIO Ø60 MCH36	KIT 3RD STAGE GUIDE CYLINDER Ø60 MCH36
2.1	1		O-RING 2275 NBR90SH (69.57X1.78)	O-RING 2275 NBR90SH (69.57X1.78)
2.2	1		CILINDRO GUIDA 3° STADIO Ø60 MCH36	3RD STAGE GUIDE CYLINDER Ø60 MCH36
2.3	1		O-RING 3237 NBR90SH (60.00X2.62)	O-RING 3237 NBR90SH (60.00X2.62)
2.4	1		CILINDRO 3° STADIO Ø32 MCH36	3RD STAGE CYLINDER Ø32 MCH36
2.5	4		VITE PRIGIONIERA M8X90-8.8	STUD SCREW M8X90-8.8
2.6	4		DADO M8 AUTOBLOCCANTE	NUT M8
2.7	1		KIT PATTINO 3°/4° STADIO Ø60 MCH36	KIT 3RD/4TH STAGE PAD Ø60 MCH36
KIT3	1	36-02-009/R	KIT TESTATA 2°/3°STADIO	KIT 2ND/3RD STAGE HEAD
3.1	1		TESTATA 2°/3°STADIO	2ND/3RD STAGE HEAD
3.2	6		VITE T.C.E. ZINCATA 8X30	SCREW T.C.E. ZINCATA 8X30
3.3	2		RONDELLA RAME 28X34X1	COPPER WASHER 28X34X1
3.4	2		O-RING 4112 VITON90SH (28.17X3.53)	O-RING 4112 VITON90SH (28.17X3.53)
3.5	1		O RING 2112 VITON 90SH VERDE (28.3 X 1.78)	O RING 2112 VITON 90SH GREEN (28.3 X 1.78)
3.6	1		COPERCHIO CAMPANE VALVOLE 2°/3°STADIO	2ND/3RD STAGEVALVES BELL COVER
3.7	2		RONDELLA Ø10	WASHER Ø10
3.8	2		VITE TEZN M10X35-8.8	SCREW TEZN M10X35-8.8
KIT4	1	36-03-015/R	KIT VALV. ASPIRAZ. 3°ST HOERBIGER 34-137753-AN	KIT 3RD STAGE INTAKE VALVE HOERBIGER 34-137753-AN
4.1	1		RONDELLA RAME 28X34X1	COPPER WASHER 28X34X1
4.2	1	36-03-015	VALV. ASPIRAZ. 3°STADIO HOERBIGER 34-137753-AN	3RD STAGE INTAKE VALVE HOERBIGER 34-137753-AN
4.3	1		CAMPANA VALVOLA ASPIRAZIONE 2°/3°STADIO	2ND/3RD STAGE INTAKE VALVE BELL
4.4	1		O-RING 4112 VITON90SH (28.17X3.53)	O-RING 4112 VITON90SH (28.17X3.53)
KIT5	1	36-03-018/R	KIT VALV. SCARICO 3°ST HOERBIGER 39-137754-AN	KIT 3RD STAGE DISCHARGE VALVE HOERBIGER 39-137754-AN
5.1	1		RONDELLA RAME 28X34X1	COPPER WASHER 28X34X1
5.2	1	36-03-018	VALV. SCARICO 3°STADIO HOERBIGER 39-137754-AN	3RD STAGE DISCHARGE VALVE HOERBIGER 39-137754-AN
5.3	1		CAMPANA VALVOLA SCARICO 2°/3°STADIO	2ND/3RD STAGE DISCHARGE VALVE BELL
5.4	1		O-RING 4112 VITON90SH (28.17X3.53)	O-RING 4112 VITON90SH (28.17X3.53)
5.5	1		O RING 2112 VITON 90SH VERDE (28.3 X 1.78)	O RING 2112 VITON 90SH GREEN (28.3 X 1.78)

3° STADIO - 3rd STAGE

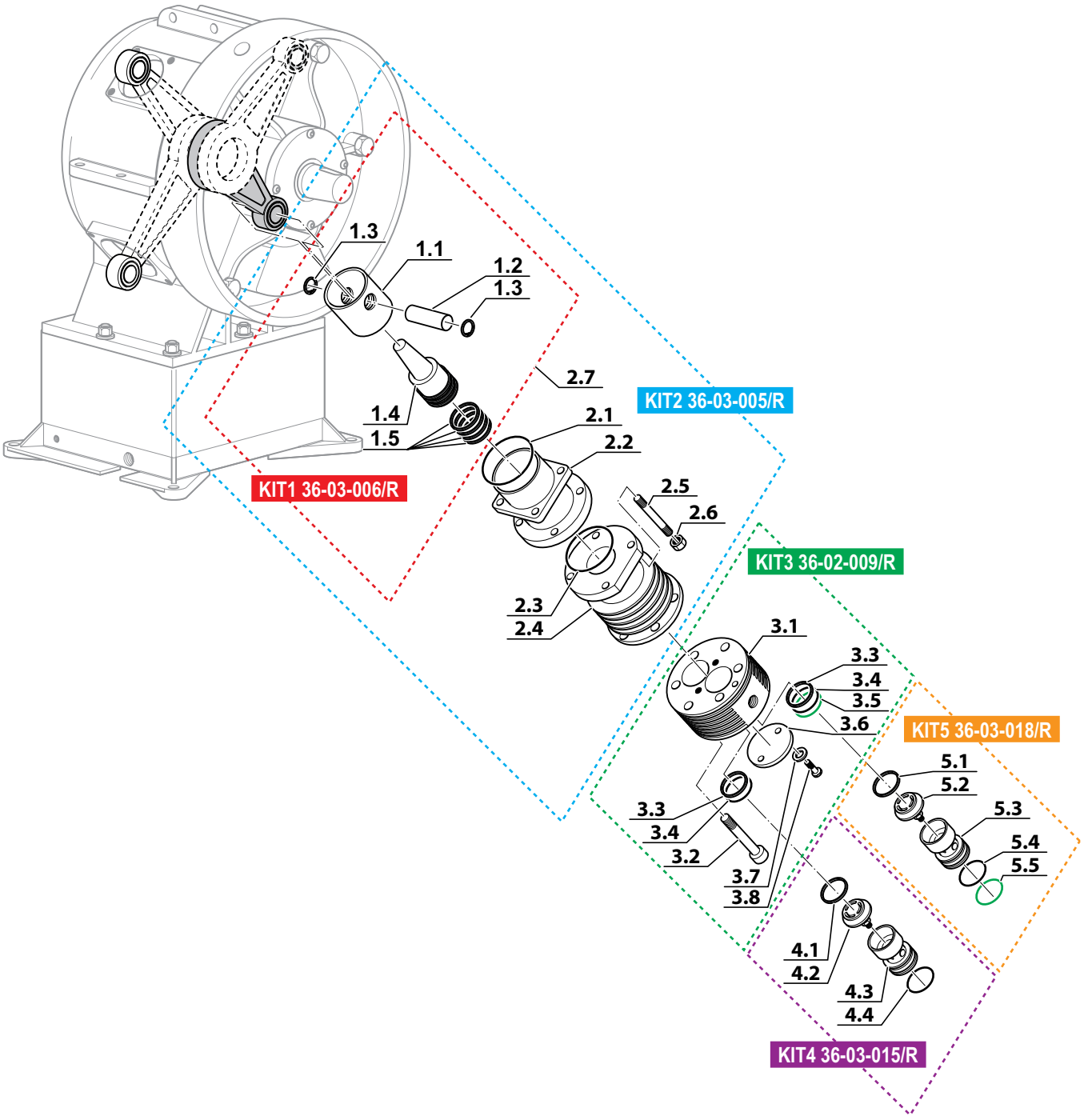

4° STADIO - 4th STAGE

Rif. Pos.	Q.tà Q.ty	Codice Code	Descrizione	Description
KIT1	1	36-03-001/R	KIT PATTINO 3°/4° STADIO Ø60 MCH36	KIT 3RD/4TH STAGE PAD Ø60 MCH36
1.1	1		PATTINO 3°/4°STADIO Ø60 MCH36	3RD/4TH STAGE PAD Ø60 MCH36
1.2	1		SPINOTTO PISTONE 3°/4° STADIO B22X48 PIENO	3RD/4TH STAGE PISTON PIN B22X48
1.3	2		SEEGER	SNAP RING
KIT2	1	36-04-005/R	KIT CILINDRO GUIDA 4°STADIO	KIT 4TH STAGE CYLINDER
2.1	1		O-RING 2275 NBR90SH (69.57X1.78)	O-RING 2275 NBR90SH (69.57X1.78)
2.2	1		CILINDRO GUIDA 4°STADIO	4TH STAGE CYLINDER
2.3	4		VITE PRIGIONIERA M8X42-8.8	STUD SCREW M8X42-8.8
2.4	4		DADO M8 AUTOBLOCCANTE	NUT M8
2.5	1		TESTATA 4° STADIO MCH-36 ASPIRAZIONE	SUCTION 4TH STAGE HEAD
2.6	1		RACCORDO E212-112L G3/8' TUBO 12 LARGA	FITTING E212-112L G3/8' TUBO 12 LARGA
2.7	2		VITE T.C.E. ZINC. 6X40 DIN912	SCREW T.C.E. ZINC. 6X40 DIN912
KIT3	1	36-04-009/15/N/R	KIT CILINDRO 4° ST. Ø15 MCH-36 NUOVO	KIT NEW 4TH STAGE CYLINDER Ø15
3.1	1		PISTONE 4°STADIO Ø15 MCH-36 NUOVO	4TH STAGE PISTON Ø15 MCH-36 NEW
3.2	1		N°6 SEGMENTI 3° STADIO Ø15	N°6 SEGMENTS 3RD STAGE Ø15
3.3	1		O-RING 2106 VITON 90 SH VERDE (26,7X1,78)	O-RING 2106 VITON 90 SH GREEN (26,7X1,78)
3.4	1		CILINDRO 4° ST. Ø15 MCH-36 NUOVO	NEW 4TH STAGE CYLINDER Ø15
3.5	3		O-RING 2081 VITON 90SH (20.35X1.78)	O-RING 2081 VITON 90SH (20.35X1.78)
KIT4	1	36-04-011/1/R	KIT VALVOLA TESTA 4° ST. MCH36	KIT VALVE HEAD 4° ST. MCH36
4.1	1		BUSSOLA GUIDA VALVOLA SCARICO 4° ST. MCH36	GUIDE BUSH DISCHARGE VALVE 4° ST. MCH36
4.2	1		VITE GUIDA MOLLA VALVOLA SCARICO 4° ST. MCH36	GUIDE SPRING SCREW DISCHARGE VALVE 4° ST. MCH36
4.3	1		MOLLA INOX Ø11X8,6 L. 18,5 FILO 1,2 4° ST. MCH-36	SPRING INOX Ø11X8,6 L. 18,5 FILO 1,2 4° ST. MCH-36
4.4	1		PIATTELLO VALV. SCAR. TESTA 4° ST. MCH36	PLATE VALVE DISCHARGE HEAD 4° ST. MCH36
4.5	1		VALVOLA TESTA 4° ST. MCH36	HEAD VALVE 4° ST. MCH36
4.6	1		OR-3137 VITON 90SH (34.60X2.62)	OR-3137 VITON 90SH (34.60X2.62)
4.7	1		DISCO VALVOLA ASP. MCH36 (24X15,2X1)	SUCTION DISK VALVE MCH36 (24X15,2X1)
4.8	1		MOLLA 24X15,2 H.0,2 4° ST. MCH-36	SPRING 24X15,2 H.0,2 4° ST. MCH-36
KIT5	1	36-04-025/R	KIT CALOTTA TESTA 4° STADIO MCH-36 NUOVA	KIT NEW 4TH STAGE HEAD COVER
5.1	1		TESTA MANDATA 4° ST. MCH-36	4TH STAGE HEAD FLOW
5.2	1		RONDELLA 1/4 IN RAME	COPPER WASHER 1/4
5.3	1		RACCORDO 1/4 G TUBO Ø8MM	FITTING 1/4 G TUBE Ø8MM
5.4	2		VITE T.C.E. ZINC. 6X40 DIN912	SCREW T.C.E. ZINC. 6X40 DIN912
5.5	6		VITE T.C.E. ZINC. 8X90	SCREW T.C.E. ZINC. 8X90
5.6	6		RONDELLA PIANA ZINCATA M8 (8,5x14x1,5)	GALVANIZED FLAT WASHER M8 (8,5x14x1,5)
5.7	1		DADO INOX CIECO M8 DIN 1587	NUT INOX BLIND M8 DIN 1587
5.8	1		RONDELLA RAME M8 (8X14X1,5)	COPPER WASHER M8 (8X14X1,5)

4° STADIO - 4th STAGE

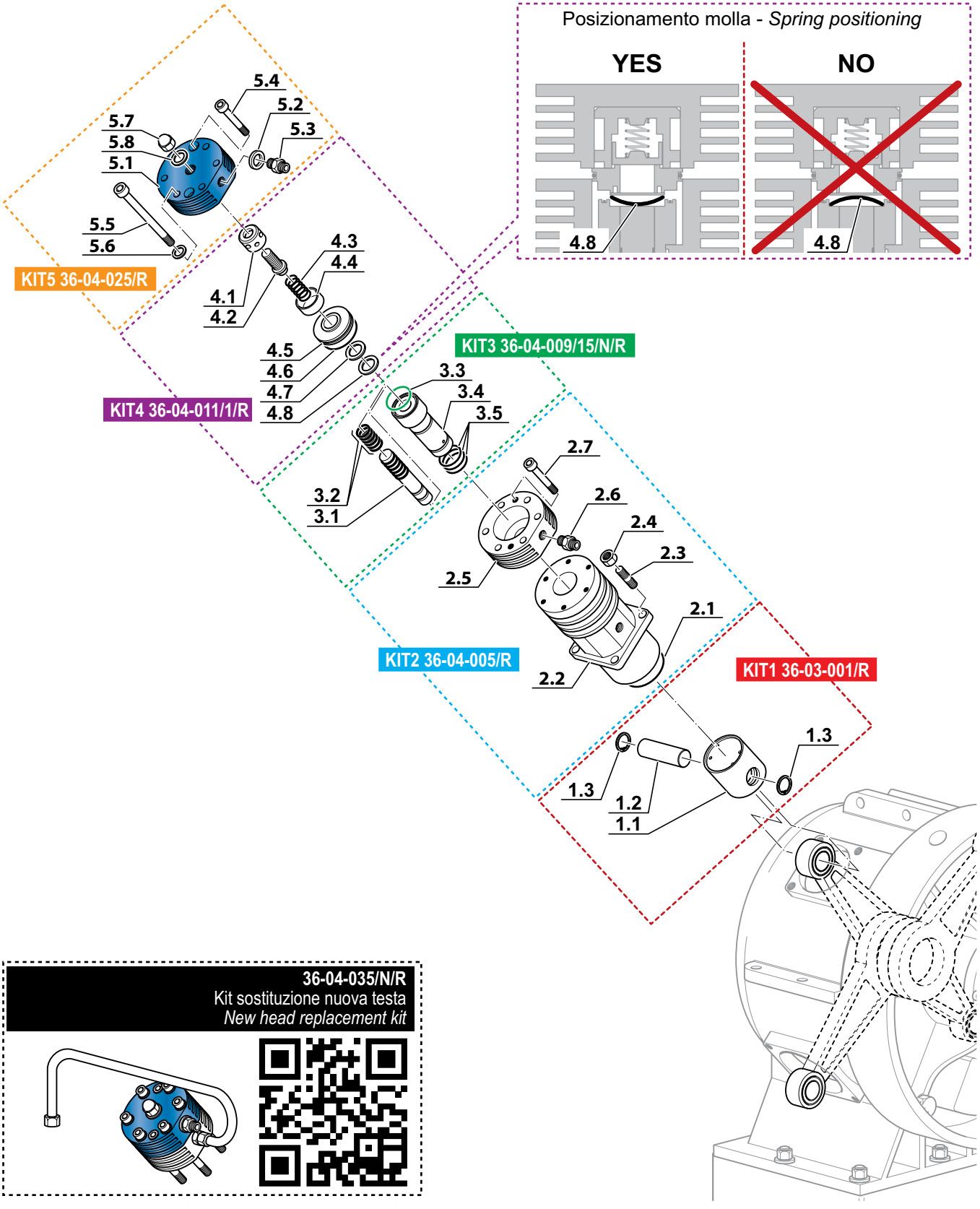

36-04-035/N/R
Kit sostituzione nuova testa
New head replacement kit

SEPARATORI DI CONDENSA - CONDENSATE SEPARATOR

Rif. Pos.	Q.tà Q.ty	Codice Code	Descrizione	Description
KIT1a	1	36-05-007/R	SEPARATORE DI CONDENSA 2° STADIO	2ND STAGE CONDENSATE SEPARATOR
KIT1b	1	36-05-012/R	SEPARATORE DI CONDENSA 3° STADIO	3RD STAGE CONDENSATE SEPARATOR
1.1b	1		TAPPO DX SEPARATORE G3/8 3°STADIO	3RD STAGE G3/8 SEPARATOR RIGHT PLUG
1.1a	1		TAPPO SX SEPARATORE G1/2 2°STADIO	2ND STAGE G1/2 SEPARATOR LEFT PLUG
1.2	1		O-RING 2212 NBR90SH (53.67X1.78)MCH36	O-RING 2212 NBR90SH (53.67X1.78)MCH36
1.3	1		GHIERA SEPARATORE	SEPARATOR RING
1.4	1		TUBO INOX SEPARATORE CONDENSA	CONDENSATE SEPARATOR PIPE, STAINLESS
1.5	1		OR- 2150 (37,82X1,78) NBR90SH	OR- 2150 (37,82X1,78) NBR90SH
1.6	1		TAPPO INTERNO SEP. NUOVO MCH-13/16	MCH-13/16 SEPARATOR FITTING INTERNAL PLUG
1.7	2		DIFFUSORE SEPARATORE DI CONDENSA MCH13/16	NEW CONDENSATE SEPARATOR DIFFUSER MCH13/16
1.8	1		RACC. PORTAFILTRO SEP. NUOVO MCH-13/16	MCH-13/16 SEPARATOR FITTING
1.9	1		RONDELLA DIAM. 48 C/F D.12,5 IN ALL. SP. 1	D48 C/F D.12,5 IN ALL. SP. 1 WASHER
1.10	1		SILENZIATORE 1/4 E90A4003	SILENCER 1/4 E90A4003
KIT2	1	36-05-026/R	KIT SEPARATORE RECUPERO SFIATO	VENT RECOVERY SEPARATOR KIT
2.1	1		SEPARATORE RECUPERO SFIATO	VENT RECOVERY SEPARATOR
2.2	1		TAPPO SEPARATORE RECUPERO SFIATO	VENT RECOVERY SEPARATOR PLUG
2.3	1		O-RING	O-RING
2.4	1		BICCHIERE SEPARATORE RECUPERO SFIATO	VENT RECOVERY SEPARATOR CUP
3	2	36-05-048	VITE TCEIZN M6X20-8.8	SCREW TCEIZN M6X20-8.8
4	1	36-05-021	VALVOLA DI SICUREZZA 100BAR	SAFETY VALVE 100BAR
5	2	13-00-0137	DADO M6	NUT M6
6	1	36-05-047	SUPPORTO SEPARATORE RECUPERO SFIATO	VENT RECOVERY SEPARATOR SUPPORT
7	1	36-05-020	VALVOLA DI SICUREZZA 2°STADIO	2ND STAGE SAFETY VALVE
8	2	36-05-046	COLLARE SEPARATORE	SEPARATOR COLLAR
9	4	13-00-0048	VITE TCEIZN M8X25-8.8	SCREW TCEIZN M8X25-8.8
10	1	36-05-023	RACCORDO 90° TUBO Ø12	FITTING 90° TUBE Ø12
11	1	36-05-024/P	TUBO RECUPERO SFIATO SEPARATORE	SEPARATOR VENT RECOVERY PIPE
12	3	36-05-025	RACCORDO 1/4 NPT TUBO Ø12	FITTING 1/4 NPT TUBE Ø12
13	1	36-05-030/P	TUBO RECUPERO SFIATO MONOBLOCCO	CRANKCASE VENT RECOVERY PIPE
14	1	36-05-028/P	TUBO RECUPERO OLIO SFIATO	OIL VENT RECOVERY PIPE
15	1	36-05-027	RACCORDO TUBO Ø6 E212 106L G1/8	FITTING TUBE Ø6 E212 106L G1/8
16	1	36-05-029	RACCOR.TUBO Ø6 LG1/4' CON GUARNIZIONE	FITTING TUBE Ø6 LG1/4' WITH GASKET

SEPARATORI DI CONDENSA - CONDENSATE SEPARATOR

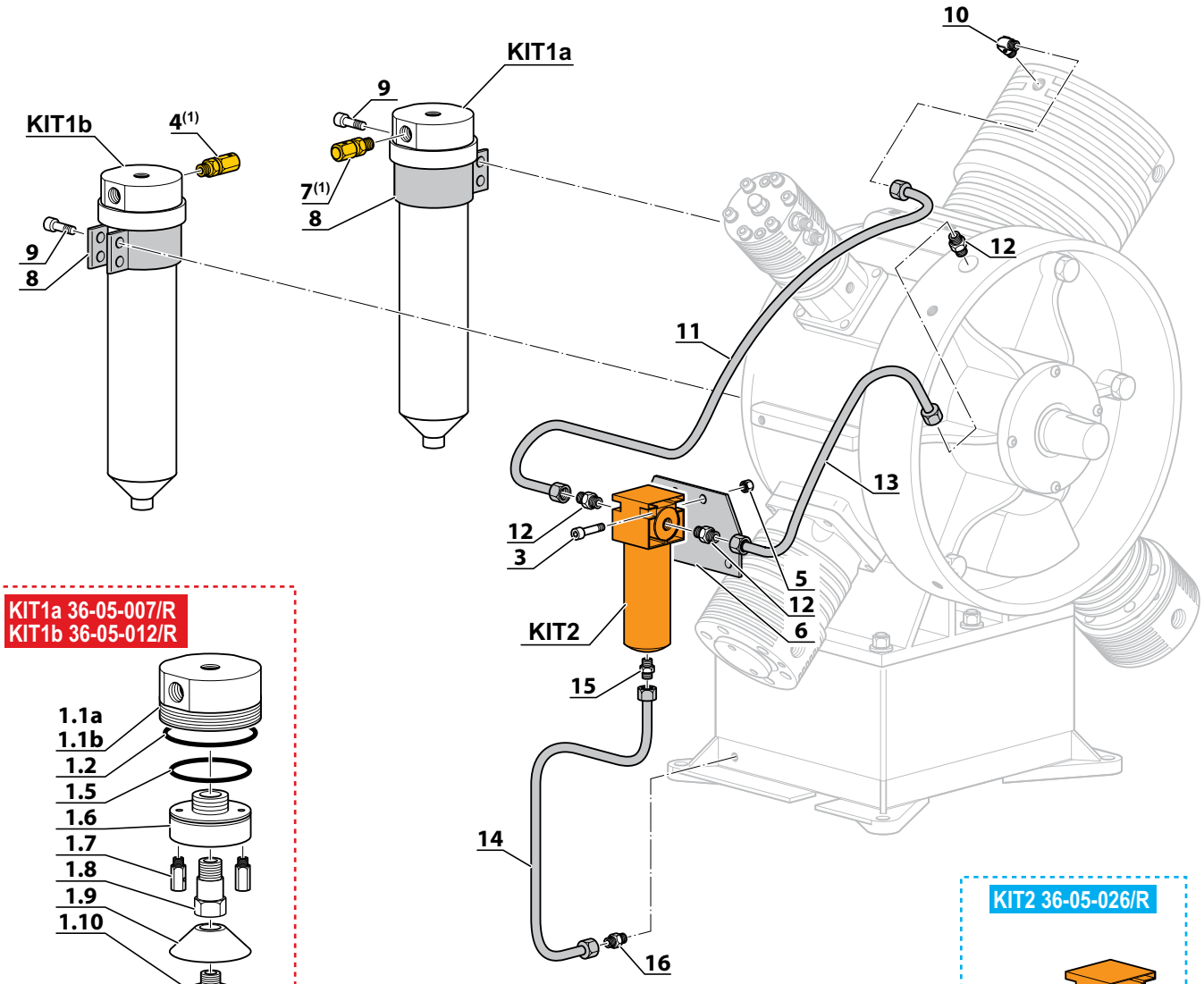

KIT1a 36-05-007/R
KIT1b 36-05-012/R

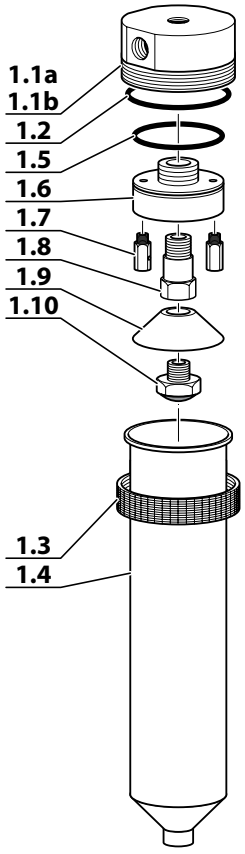

KIT2 36-05-026/R

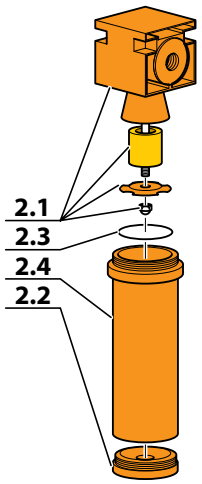

4 - 7 (1) La valvola deve essere stretta con una coppia di serraggio di **20Nm** - The valve must be tightened with a torque of **20Nm**

CIRCUITO DI PRESSIONE 1°/2° STADIO - 1st/2nd PRESSURE CIRCUIT

Rif. Pos.	Q.tà Q.ty	Codice Code	Descrizione	Description
KIT1	1	36-05-001/R	KIT TUBO RAFFREDDAMENTO 1°STADIO (1°PARTE)	KIT 1ST STAGE COOLING PIPE (1ST PART)
1.1	1		TUBO RAFFREDDAMENTO 1°STADIO (1°PARTE)	1ST STAGE COOLING PIPE (1ST PART)
1.2	4		DADO M8	NUT M8
1.3	16		VITE TSPEIZN M8X35-10.9	SCREW TSPEIZN M8X35-10.9
1.4	4		STAFFA "L" TUBO RAFFREDDAMENTO 1°ST. (1°PARTE)	1ST STAGE (1ST PART) COOLING PIPE "L" BRACKET
1.5	4		STAFFA FERMATUBO Ø18 / Ø8	PIPE BRACKET Ø18 / Ø8
1.6	4		VITE TCEIZN M8X25-8.8	SCREW TCEIZN M8X25-8.8
1.7	4		RONDELLA Ø8	WASHER Ø8
KIT2	1	36-05-004/R	KIT TUBO RAFFREDDAMENTO 1°STADIO (2°PARTE)	KIT 1ST STAGE COOLING PIPE (2ND PART)
2.1	1		TUBO RAFFREDDAMENTO 1°STADIO (2°PARTE)	1ST STAGE COOLING PIPE (2ND PART)
2.2	3		VITE TCEIZN M8X35-8.8	SCREW TCEIZN M8X35-8.8
2.3	2		VITE ZINC.8X30 DIN 7993	SCREW ZINC.8X30
2.4	1		STAFFA FERMATUBO Ø18 SEI VIE	PIPE BRACKET Ø18 SIX-WAY
2.5	1		SUPPORTO TUBO RAFFREDDAMENTO 1°ST. (2°PARTE)	1ST STAGE (2ND PART) COOLING PIPE SUPPORT
KIT3	1	36-05-006/R	KIT TUBO RAFFREDDAMENTO 2°/3°STADIO	KIT 2ND/3RD STAGE COOLING PIPE
3.1	1		TUBO RAFFREDDAMENTO 2°/3°STADIO	2ND/3RD STAGE COOLING PIPE
3.2	4		VITE T.C.E. ZINC. 6X45 DIN912	SCREW 6X45 T.C.E. ZINC. DIN 912
3.3	4		STAFFA INTERNA FERMATUBO Ø15 SETTE VIE	INTERNAL PIPE BRACKET Ø15 SEVEN-WAY
3.4	2		STAFFA ESTERNA FERMATUBO Ø15 OTTO VIE	EXTERNAL PIPE BRACKET Ø15 EIGHT-WAY
3.5	7		VITE TCEIZN M6X40-8.8	SCREW TCEIZN M6X40-8.8
3.6	7		DADO M6	NUT M6
KIT4	1	36-05-040/R	KIT SUPPORTO TUBI RAFFREDDAMENTO	KIT COOLING PIPE SUPPORT MCH-36
4.1	1		SUPPORTO TUBI RAFFREDDAMENTO	COOLING PIPE SUPPORT MCH-36
4.2	2		VITE TCEIZN M8X25-8.8	SCREW TCEIZN M8X25-8.8
5	4	36-05-005	RACCORDO TUBO Ø15 G1/2' CON GUARNIZIONE	FITTING TUBE D.15 G1/2 WITH GASKET
6	1	36-05-009/P	TUBO COLLEGAMENTO SEPARATORE 3°STADIO	3RD STAGE SEPARATOR CONNECTION PIPE
7	2	36-05-002	RACCORDO E212 118 L G1/2	FITTING E212 118 L G1/2
8	1	36-05-053	RACCORDO M26X1,5 TUBO Ø18 CON 2 FORI 1/8'NPT	FITTING M26X1,5 TUBE Ø18 WITH 2 HOLE 1/8'NPT

CIRCUITO DI PRESSIONE 1°/2° STADIO - 1st/2nd PRESSURE CIRCUIT

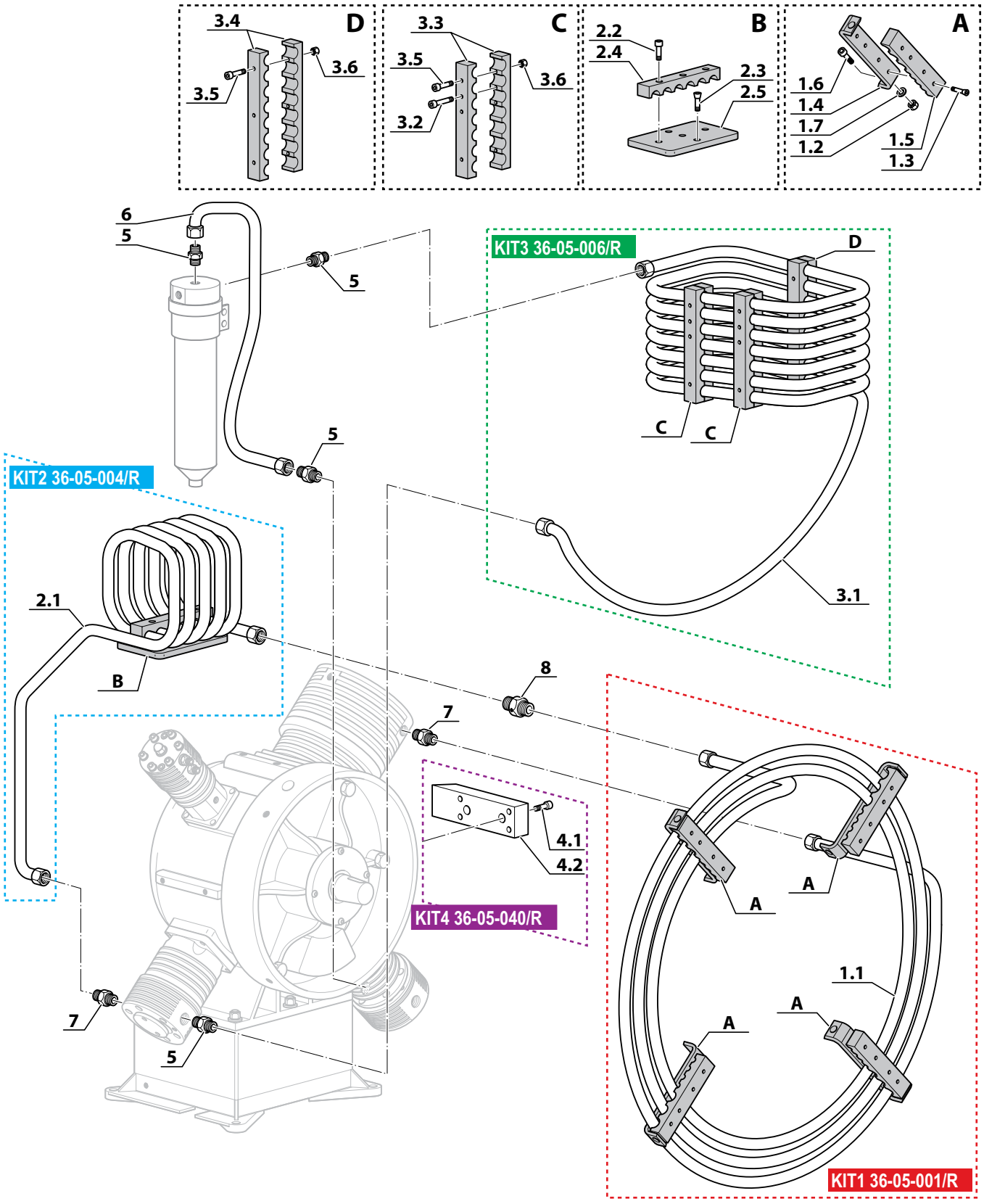

CIRCUITO DI PRESSIONE 1°/2° STADIO MCH-22 - 1st/2nd PRESSURE CIRCUIT MCH-22

Rif. Pos.	Q.tà Q.ty	Codice Code	Descrizione	Description
KIT1	1	22-05-001/R	KIT TUBO RAFFR. 1°STADIO (1°PARTE) 12MM MCH-22	KIT 1ST STAGE COOLING PIPE (1ST PART) 12MM MCH-22
1.1	1		TUBO RAFFR. 1°STADIO (1°PARTE) 12MM MCH-22	1ST STAGE COOLING PIPE (1ST PART) 12MM MCH-22
1.2	4		DADO M8	NUT M8
1.3	16		VITE TSPEIZN M8X35-10.9	SCREW TSPEIZN M8X35-10.9
1.4	4		STAFFA "L" TUBO RAFFREDDAMENTO 1°ST. (1°PARTE)	1ST STAGE (1ST PART) COOLING PIPE "L" BRACKET
1.5	4		STAFFA FERMATUBO Ø12 / Ø8 MCH-22	PIPE BRACKET Ø12 / Ø8 MCH-22
1.6	4		VITE TCEIZN M8X25-8.8	SCREW TCEIZN M8X25-8.8
1.7	4		RONDELLA Ø8	WASHER Ø8
KIT2	1	36-05-040/R	KIT SUPPORTO TUBI RAFFREDDAMENTO	KIT COOLING PIPE SUPPORT MCH-36
2.1	1		SUPPORTO TUBI RAFFREDDAMENTO	COOLING PIPE SUPPORT MCH-36
2.2	2		VITE TCEIZN M8X25-8.8	SCREW TCEIZN M8X25-8.8
KIT3	1	22-05-006/R	KIT TUBO RAFFR. 2°/3°STADIO 12MM MCH-22	KIT 2ND/3RD STAGE COOLING PIPE 12MM MCH-22
3.1	1		TUBO RAFFR. 2°/3°STADIO 12MM MCH-22	2ND/3RD STAGE COOLING PIPE 12MM MCH-22
3.2	4		VITE T.C.E. ZINC. 6X45 DIN912	SCREW 6X45 T.C.E. ZINC. DIN 912
3.3	4		STAFFA INTERNA FERMATUBO Ø12 SETTE VIE MCH-22	INTERNAL PIPE BRACKET Ø12 SEVEN-WAY MCH-22
3.4	2		STAFFA ESTERNA FERMATUBO Ø12 OTTO VIE MCH-22	EXTERNAL PIPE BRACKET Ø12 EIGHT-WAY MCH-22
3.5	7		VITE TCEIZN M6X40-8.8	SCREW TCEIZN M6X40-8.8
3.6	7		DADO M6	NUT M6
4	6	RACCE212112LG1/2	RACC. E212-112L G1/2' CON GUARNIZIONE LARGA	FITTING E212-112L G1/2 WITH GASKET
5	1	25-05-0100	RACCORDO 12MM CON FORO 1/8 NPT	FITTING 12MM WITH HOLE 1/8 NPT
6	1	24-01-0001/A1	TUBO RAFFR. 12MM 1°STADIO (2°PARTE) MCH-22	1ST STAGE COOLING PIPE 12MM (2ND PART) MCH-22
7	1	22-05-009	TUBO COLLEGAMENTO SEP. 3°STADIO 12MM MCH-22	3RD STAGE SEP. CONNECTION PIPE 12MM MCH-22

CIRCUITO DI PRESSIONE 1°/2° STADIO MCH-22 - 1st/2nd PRESSURE CIRCUIT MCH-22

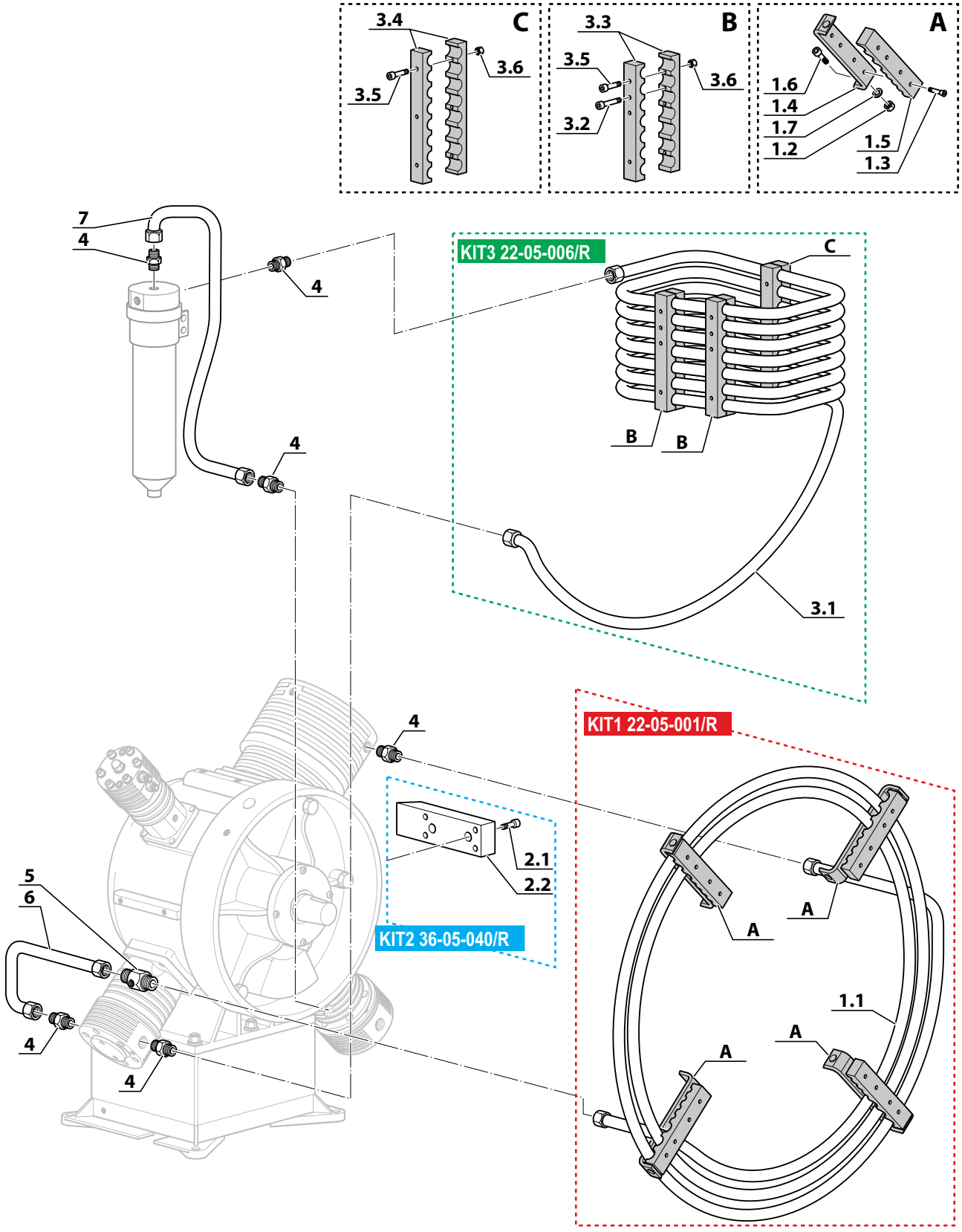

CIRCUITO DI PRESSIONE 3°/4° STADIO - 3rd/4th PRESSURE CIRCUIT

Rif. Pos.	Q.tà Q.ty	Codice Code	Descrizione	Description
KIT1	1	36-05-011/R	KIT TUBO RAFFREDDAMENTO 3°/4°STADIO	KIT 3RD/4TH STAGE COOLING PIPE
1.1	1		TUBO RAFFREDDAMENTO 3°/4°STADIO	3RD/4TH STAGE COOLING PIPE
1.2	7		DADO M6	NUT M6
1.3	4		VITE T.C.E. ZINC. 6X45 DIN912	SCREW 6X45 T.C.E. ZINC. DIN 912
1.4	4		STAFFA INTERNA FERMATUBO Ø15 SETTE VIE	INTERNAL PIPE BRACKET Ø15 SEVEN-WAY
1.5	2		STAFFA ESTERNA FERMATUBO Ø15 OTTO VIE	EXTERNAL PIPE BRACKET Ø15 EIGHT-WAY
1.6	7		VITE TCEIZN M6X40-8.8	SCREW TCEIZN M6X40-8.8
KIT2	1	36-05-040/R	KIT SUPPORTO TUBI RAFFREDDAMENTO	KIT COOLING PIPE SUPPORT MCH-36
2.1	1		SUPPORTO TUBI RAFFREDDAMENTO	COOLING PIPE SUPPORT MCH-36
2.2	2		VITE TCEIZN M8X25-8.8	SCREW TCEIZN M8X25-8.8
KIT3	1	36-05-018/R	KIT TUBO RAFFREDDAMENTO 4°STADIO	KIT 4TH STAGE COOLING PIPE
3.1	1		TUBO RAFFREDDAMENTO 4°STADIO	4TH STAGE COOLING PIPE
3.2	4		DADO M8	NUT M8
3.3	16		VITE TSPEIZN M8X35-10.9	SCREW TSPEIZN M8X35-10.9
3.4	4		STAFFA "L" TUBO RAFFREDDAMENTO 1°ST. (1°PARTE)	1ST STAGE (1ST PART) COOLING PIPE "L" BRACKET
3.5	4		STAFFA FERMATUBO Ø18 / Ø8	PIPE BRACKET Ø18 / Ø8
3.6	4		VITE TCEIZN M8X25-8.8	SCREW TCEIZN M8X25-8.8
3.7	4		RONDELLA Ø8	WASHER Ø8
4	1	36-05-019	RACCORDO PASSAPARETE	THROUGH-WALL FITTING
5	1	36-05-005	RACCORDO TUBO Ø15 G1/2' CON GUARNIZIONE	FITTING TUBE D.15 G1/2 WITH GASKET
6	1	36-05-014	RACCORDO G 3/8' CON GUARNIZIONE	FITTING G 3/8' WITH GASKET
7	1	36-05-015/N/P	NUOVO TUBO SEPARATORE 3°/4°STADIO	NEW 3RD/4TH STAGE SEPARATOR CONNECTION PIPE
8	1	36-05-010	RACCORDO 90° 1/2 NPT TUBO Ø15	FITTING 90° 1/2 NPT TUBE Ø15
9	1	36-05-015/P	TUBO COLLEGAMENTO SEPARATORE 3°/4°STADIO	3RD/4TH STAGE SEPARATOR CONNECTION PIPE

CIRCUITO DI PRESSIONE 3°/4° STADIO - 3rd/4th PRESSURE CIRCUIT

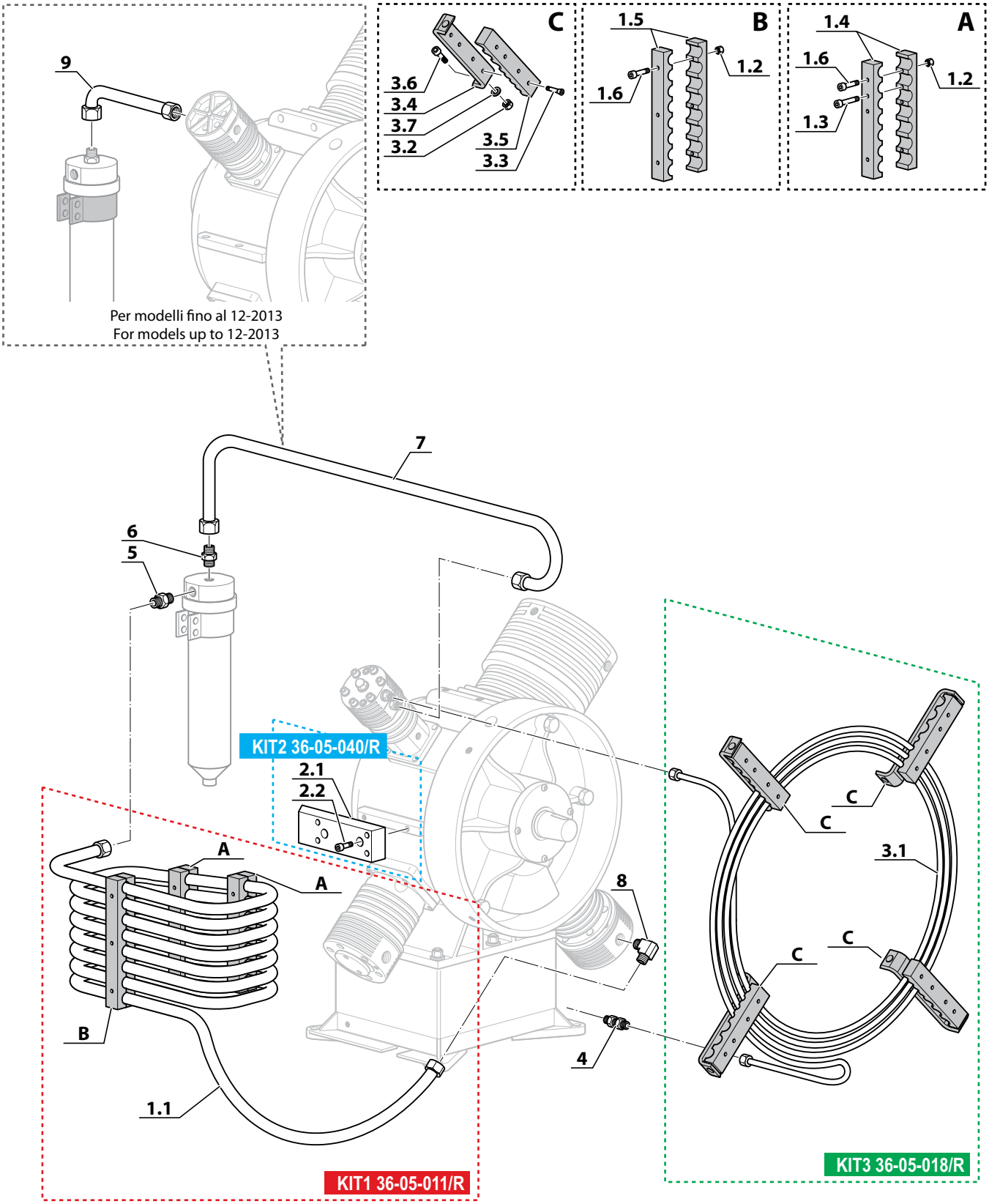

CIRCUITO DI PRESSIONE 3°/4° STADIO MCH-22 - 3rd/4th PRESSURE CIRCUIT MCH-22

Rif. Pos.	Q.tà Q.ty	Codice Code	Descrizione	Description
KIT1	1	22-05-011/R	KIT TUBO RAFF. 3°/4°STADIO 12MM MCH-22	KIT 3RD/4TH STAGE COOLING PIPE 12MM MCH-22
1.1	1		TUBO RAFFR. 3°/4°STADIO 12MM MCH-22	3RD/4TH STAGE COOLING PIPE 12MM MCH-22
1.2	7		DADO M6	NUT M6
1.3	4		VITE T.C.E. ZINC. 6X45 DIN912	SCREW 6X45 T.C.E. ZINC. DIN 912
1.4	4		STAFFA INTERNA FERMATUBO Ø12 SETTE VIE MCH-22	INTERNAL PIPE BRACKET Ø12 SEVEN-WAY MCH-22
1.5	2		STAFFA ESTERNA FERMATUBO Ø12 OTTO VIE MCH-22	EXTERNAL PIPE BRACKET Ø12 EIGHT-WAY MCH-22
1.6	7		VITE TCEIZN M6X40-8.8	SCREW TCEIZN M6X40-8.8
KIT2	1	36-05-040/R	KIT SUPPORTO TUBI RAFFREDDAMENTO	KIT COOLING PIPE SUPPORT MCH-36
2.1	1		SUPPORTO TUBI RAFFREDDAMENTO	COOLING PIPE SUPPORT MCH-36
2.2	2		VITE TCEIZN M8X25-8.8	SCREW TCEIZN M8X25-8.8
KIT3	1	36-05-018/R	KIT TUBO RAFFREDDAMENTO 4°STADIO	KIT 4TH STAGE COOLING PIPE
3.1	1		TUBO RAFFREDDAMENTO 4°STADIO	4TH STAGE COOLING PIPE
3.2	4		DADO M8	NUT M8
3.3	16		VITE TSPEIZN M8X35-10.9	SCREW TSPEIZN M8X35-10.9
3.4	4		STAFFA "L" TUBO RAFFREDDAMENTO 1°ST. (1°PARTE)	1ST STAGE (1ST PART) COOLING PIPE "L" BRACKET
3.5	4		STAFFA FERMATUBO Ø12 / Ø8 MCH-22	PIPE BRACKET Ø12 / Ø8 MCH-22
3.6	4		VITE TCEIZN M8X25-8.8	SCREW TCEIZN M8X25-8.8
3.7	4		RONDELLA Ø8	WASHER Ø8
4	1	36-05-019	RACCORDO PASSAPARETE	THROUGH-WALL FITTING
5	1	RACCE212112LG1/2	RACC. E212-112L G1/2' CON GUARNIZIONE LARGA	FITTING E212-112L G1/2 WITH GASKET
6	1	RACC/E212112L38	RACCORDO G3/8 TUBO 12 LARGA	FITTING G3/8 PIPE 12 LARGA
7	1	36-05-015/N/P	NUOVO TUBO SEPARATORE 3°/4°STADIO	NEW 3RD/4TH STAGE SEPARATOR CONNECTION PIPE
8	1	36-05-010	RACCORDO 90° 1/2 NPT TUBO Ø15	FITTING 90° 1/2 NPT TUBE Ø15
9	1	36-05-015/P	TUBO COLLEGAMENTO SEPARATORE 3°/4°STADIO	3RD/4TH STAGE SEPARATOR CONNECTION PIPE

CIRCUITO DI PRESSIONE 3°/4° STADIO MCH-22 - 3rd/4th PRESSURE CIRCUIT MCH-22

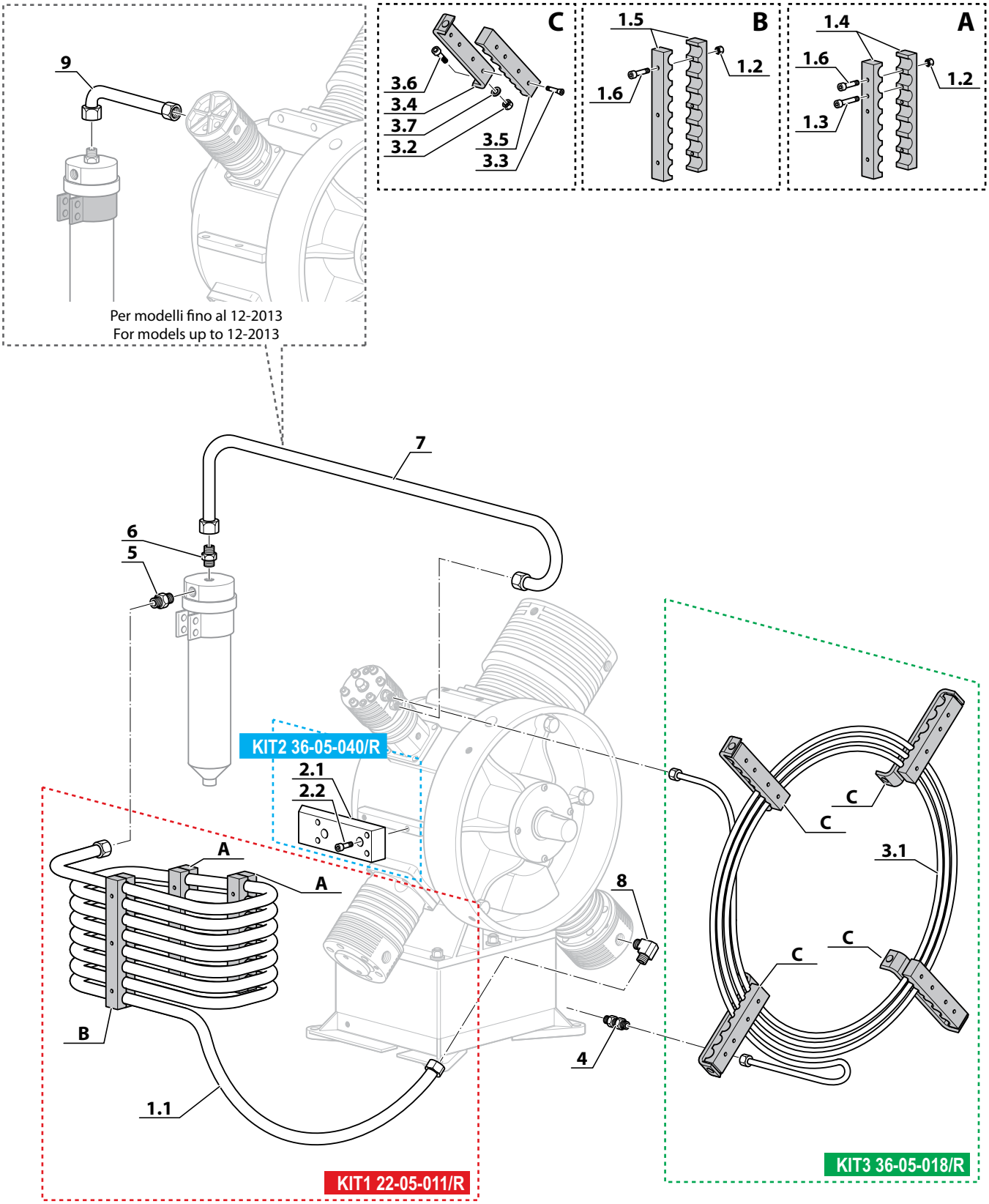

CIRCUITO DI LUBRIFICAZIONE - LUBRICATION CIRCUIT

Rif. Pos.	Q.tà Q.ty	Codice Code	Descrizione	Description
KIT1	1	36-06-006/R	KIT FILTRO OLIO	KIT OIL FILTER
1.1	1		O-RING 3137 NBR90SH (34.60X2.62)	O-RING 3137 NBR90SH (34.60X2.62)
1.2	1		FILTRO OLIO	OIL FILTER
1.3	1		GUARNIZIONE FILTRO OLIO IN NBR	OIL FILTER GASKET IN NBR
KIT2	1	36-06-007/R	KIT CARTER FILTRO OLIO	KIT OIL FILTER COVER
2.1	1	36-05-017	RACCORDO TUBO ø8 G1/4' CON GUARNIZIONE	FITTING TUBE ø8 G1/4' WITH GASKET
2.2	3	36-06-003	VITE TCEIZN M5X12-8.8	SCREW TCEIZN M5X12-8.8
2.3	1	36-06-004	TAPPO FILTRO OLIO	OIL FILTER PLUG
2.4	1	RE2ST/11	MOLLA CONICA DISCO EROGAZIONE RIF. 030	CONICAL SPRING
2.5	1	36-06-007	CARTER FILTRO OLIO	OIL FILTER COVER
2.6	1	36-06-008	RACCORDO G 1/4-1/8 NPT	FITTING G 1/4-1/8 NPT
KIT3	1	36-06-009/R	KIT POMPA OLIO	KIT OIL PUMP
3.1	1		POMPA OLIO	OIL PUMP
3.2	2		VITE T.C.E. ZINC. 5X55	SCREW 5X55 T.C.E. ZINC.
KIT4	1	36-06-022/R	KIT FLANGIA POMPA OLIO	KIT OIL PUMP FLANGE
4.1	1	36-06-022	FLANGIA POMPA OLIO	OIL PUMP FLANGE
4.2	4	36-05-039	VITE TCEIZN M6X40-8.8	SCREW TCEIZN M6X40-8.8
4.3	1	36-06-021	GUARNIZIONE FLANGIA POMPA OLIO	OIL PUMP FLANGE GASKET
4.4	1	36-06-020	GRANO M8X8-8.8 ESTREMITÀ CONICA	GRUB SCREW M8X8-8.8 TAPERED END
4.5	1	36-06-019	GIUNTO POMPA OLIO	OIL PUMP COUPLING
5	1	36-06-001/P	TUBO SCARICO POMPA OLIO	OIL PUMP DISCHARGE PIPE
6	2	36-05-017	RACCORDO TUBO ø8 G1/4' CON GUARNIZIONE	FITTING TUBE ø8 G1/4' WITH GASKET
7	1	36-05-027	RACCORDO TUBO ø6 G1/8	FITTING TUBE ø6 G1/8
8	1	36-06-032/P	TUBO Ø6 COLLEGAMENTO BLOCCHETTO/4°STADIO	BLOCK/4TH STAGE CONNECTION PIPE Ø6
9	1	36-06-013	BLOCCHETTO REGOLAZIONE PRESSIONE OLIO	OIL PRESSURE REGULATION BLOCK
10	1	13-00-0144	RACCORDO 90° 1/8 - 7/16 TUBO 6MM	FITTING 90° 1/8 - TUBO 6MM
11	1	36-06-018	RACC. G1/4 - BLOCCH. REGOL.PRESS.OLIO MCH36	FITTING G1/4' OIL PRESSURE REGULATION BLOCK
12	2	GUAR1319	RONDELLA RAME 1/4	COPPER WASHER 1/4
13	1	36-06-011	RACCOR.TUBO ø8 G 1/8' CON GUARNIZIONE	FITTING TUBE ø8 G1/8' WITH GASKET
14	1	36-06-012/P	TUBO ASPIRAZIONE OLIO Ø8	OIL INTAKE PIPE Ø8
15	2	13-00-0068	VISORE LIVELLO OLIO CON GUARNIZIONE	OIL LEVEL VIEWER WITH GASKET
16	1	13-04-0229	LIVELLO OLIO LVO127/10	OIL LEVEL LVO 127/10

CIRCUITO DI LUBRIFICAZIONE - LUBRICATION CIRCUIT

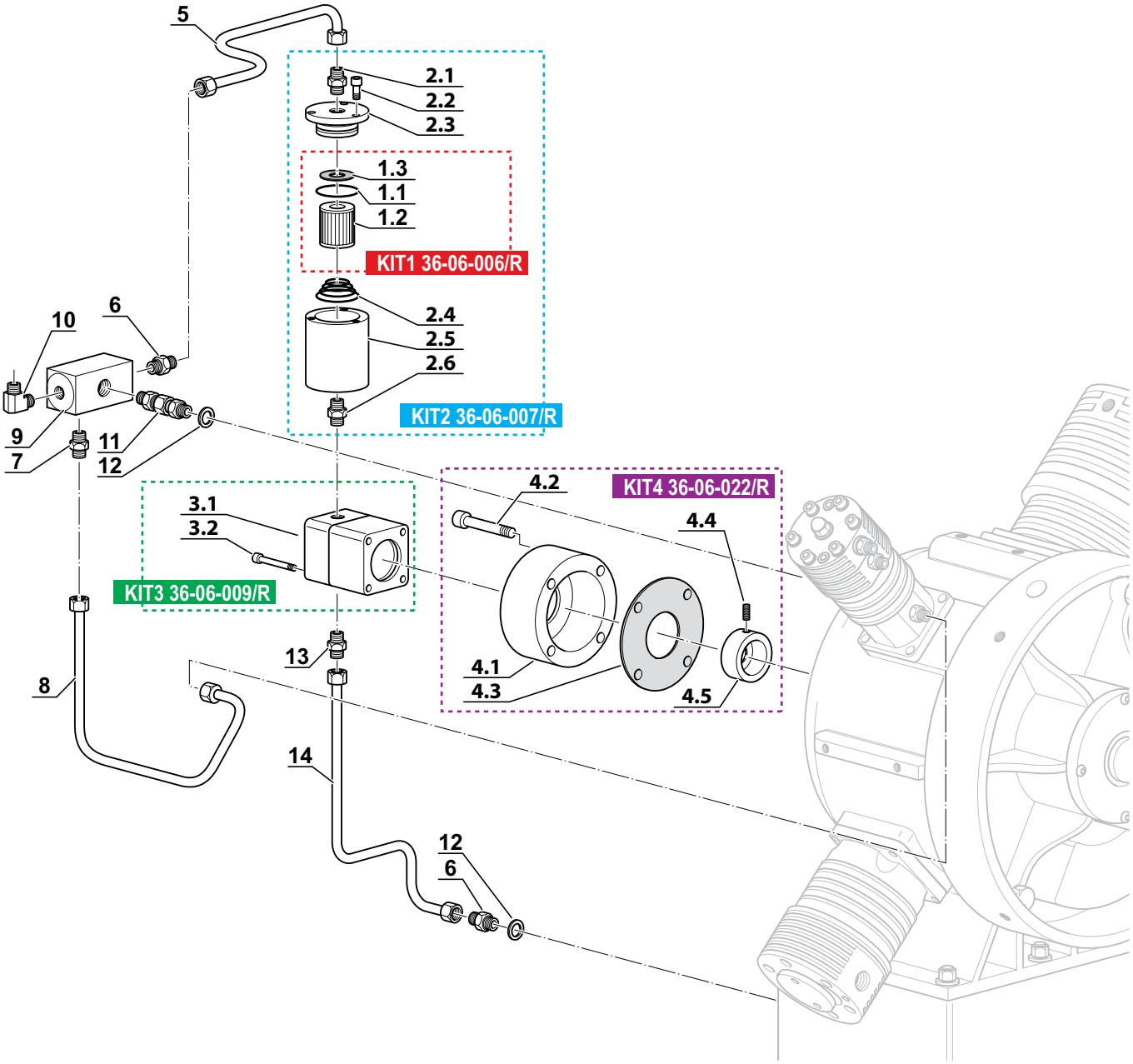

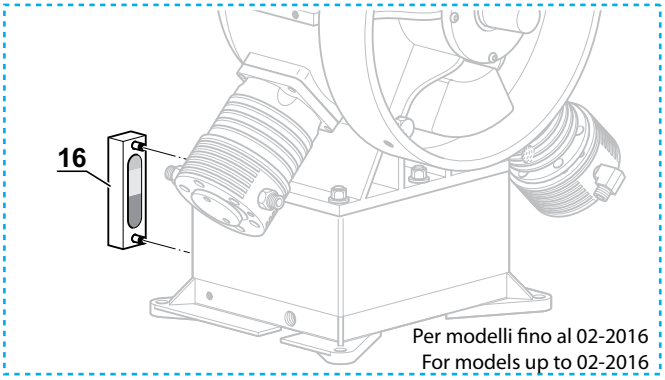

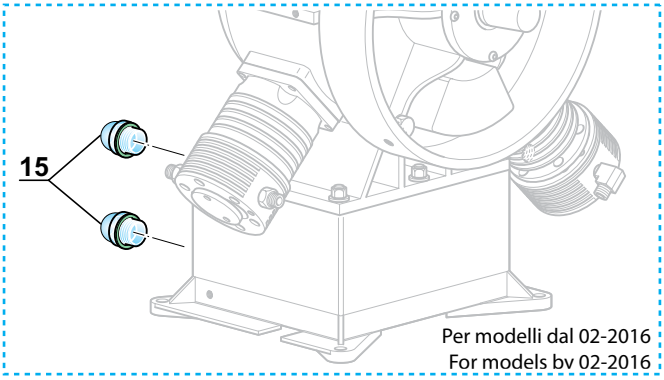

CIRCUITO DI UTILIZZO - PNEUMATIC CIRCUIT

Rif. Pos.	Q.tà Q.ty	Codice Code	Descrizione	Description
1	1	13-00-0161-1/4G/R	KIT RUBINETTO SCARICO CONDENSA 1/4	CONDENSATE DISCHARGE BODY VALVE 1/4 KIT
2	1	13-00-0162	NYLON SCARICO CONDENSA	CONDENSATE DISCHARGE NYLON
3	1	36-07-040	RACCORDO G 1/4 M. - 7/16 M.	FITTING G 1/4 M. - 7/16 M.
4	2	36-07-004	MICROTUBO HP L 900MM 1°/3°STADIO	1ST/3RD STAGE MICRO-PIPE HP L 900 MM
5	1	36-07-005	MANOMETRO FLANGIATO 1°STADIO	1ST STAGE FLANGED GAUGE
6	15	36-07-006	VITE TCEI M3X10 INOX	SCREW TCEI M3X10 STAINLESS
7	15	DA003I	DADO INOX AUTOBLOC. M3	SELF LOCKING NUT M3 INOX
8	3	36-07-008	RACCORDO 90° 1/4NPT - 7/16	FITTING 90° 1/4NPT - 7/16
9	1	36-07-009	TUBO FLESSIBILE L 700MM	FLEX HOSE L 700 MM
10	1	36-07-010	MICROTUBO HP L 1000MM 2°STADIO	2ND STAGE MICRO-PIPE HP L 1000 MM
11	1	36-07-011	MANOMETRO FLANGIATO 2°STADIO	2ND STAGE FLANGED GAUGE
12	1	36-07-012	TUBO FLESSIBILE L 1000MM	FLEX HOSE L 1000 MM
13	1	36-07-013	MANOMETRO FLANGIATO 3°STADIO	3RD STAGE FLANGED GAUGE
14	1	36-05-017	RACCORDO TUBO Ø8 G1/4' CON GUARNIZIONE	FITTING TUBE Ø8 G1/4' WITH GASKET
15	1	36-07-025	TUBO FLESSIBILE H.P. L 500MM	H.P. FLEX HOSE L 500MM
16	1	13-00-0144	RACCORDO 90° 1/8 - 7/16 TUBO 6MM	FITTING 90° 1/8 - TUBO 6MM
17	1	36-07-039/P	TUBO INOX Ø8 H.F. / V.M.P.	STAINLESS PIPE Ø8 H.F. / V.M.P.
18	4	36-07-003	RACCORDO PASSAPARETE 7/16 7/16 MM.44,5	THROUGH-WALL FITTING 7/16 7/16 MM.44,5
19	2	36-05-00220	MICROTUBO 1/4-7/16 1000mm PORTAMANOM.	MICRO-HOSE 1/4-7/16 1000MM
20	1	13-04-0211	MANOMETRO FLANGIATO H.P.	H.P. FLANGED GAUGE
21	2	13-00-0025E	RACCORDO 1/4 G -TUBO 6MM DIRITTO ERMETO	FITTING 1/4 G -PIPE 6MM ERMETO
22	1	36-07-055	MANOMETRO FLANGIATO PRESSIONE OLIO 0-6BAR	OIL PRESSURE FLANGED GAUGE 0-6BAR
23	3	13-04-0225	RACCORDO 1/4 GAS - 1/4 NPT	1/4 GAS-1/4 NPT PIPE FITTING
24	2	13-04-0217	BLOCCHETTO ALLUMINIO RAMPA DI RICARICA	RECHARGE RAMP ALUMINIUM BLOCK
25	5	13-00-0025	RACCORDO 1/4 NPT -TUBO 6MM DIRITTO 7/16	STRAIGHT FITTING 1/4 TUBE 6MM 7/16
26	2	36-06-011	RACCOR.TUBO Ø8 G 1/8' CON GUARNIZIONE	FITTING TUBE Ø8 G1/8' WITH GASKET
27	1	36-07-049/P	TUBO INOX Ø8 COLLEGAMENTO BLOCCHETTI	STAINLESS BLOCK CONNECTION PIPE Ø8
28	1	SC000310	PRESSOSTATO CON MICRO 280 BAR SCALA 0-400	PRESSURE SWITCH 280 BAR
28	1	SC000315	PRESSOSTATO 330BAR	PRESSURE SWITCH 330 BAR
29	4	13-04-0238	TUBO FLESSIBILE H.P. L 1200MM	H.P. FLEX HOSE L 1200 MM
30	1	36-07-002	TUBO FLESSIBILE L.600 MM MCH36	FLEX HOSE L.600 MM MCH36
31	1	36-07-056	MICROTUBO H.P. L 800MM	H.P. MICRO-TUBE L800 MM
32	1	36-07-093	BLOCCHETTO MCH36	MCH36 ALU BLOCK
33	4	RON10I	RONDELLA PIANA M10 INOX DIN125	FLAT WASHER M10 INOX DIN125
34	2	GUAR1319	RONDELLA 1/4 IN RAME	COPPER WASHER 1/4
35	1	SC000492	VALVOLA DI NON RITORNO	CHECK VALVE
36	4	13-00-0137	DADO ZINCATO AUTOBLOC. M6 ALTO	SELF LOCKING NUT M6 HIGH
37	8	RON6I	RONDELLA PIANA M6 INOX DIN125	FLAT WASHER M6 INOX DIN125
38	4	VITE0645I	VITE T.C.E. INOX 6X45	SCREW T.C.E. INOX 6X45
39	1	36-07-066	VALVOLA DI SICUREZZA I° STADIO	1ST STAGE SAFETY VALVE

CIRCUITO DI UTILIZZO - PNEUMATIC CIRCUIT

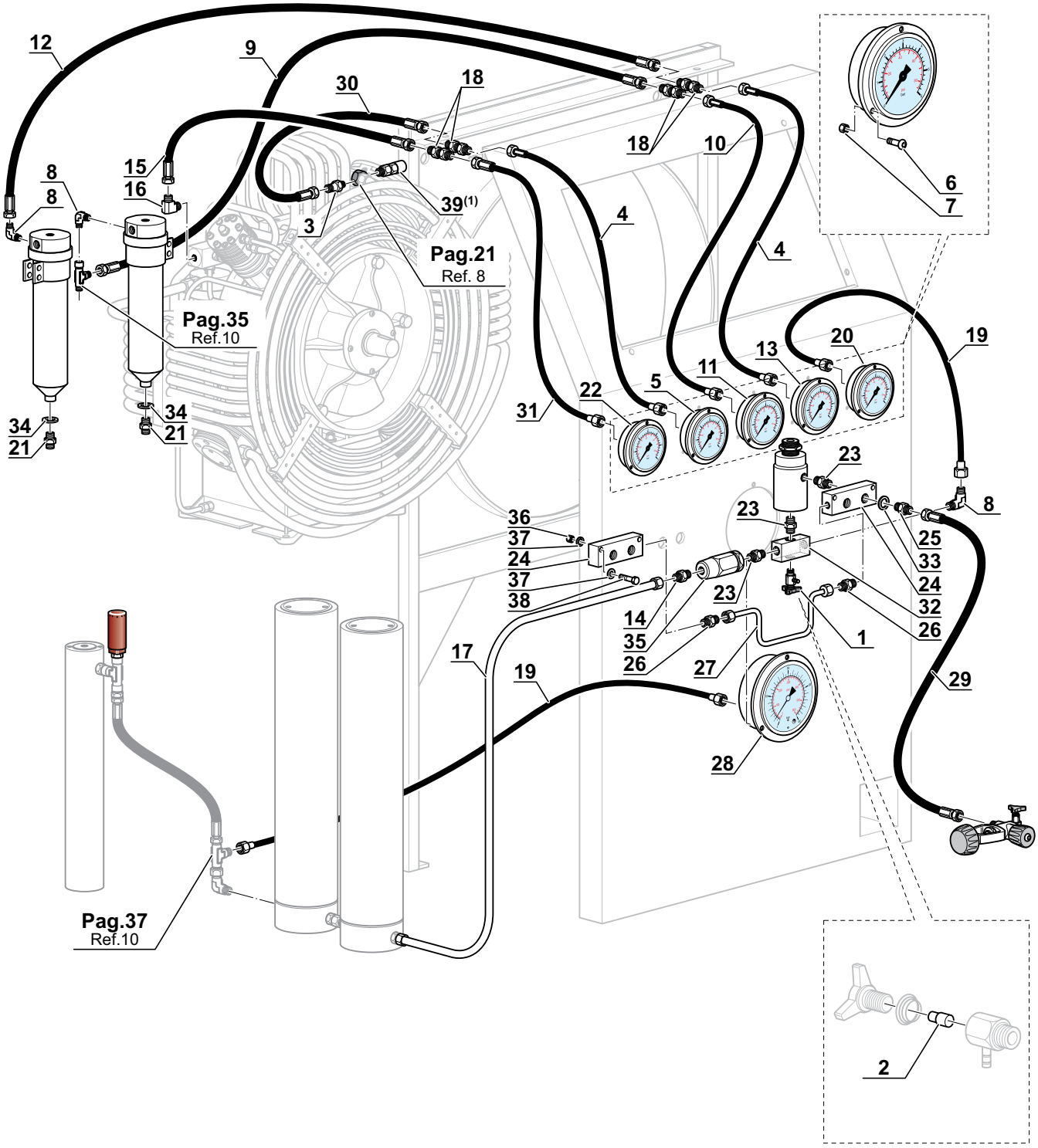

39(1) La valvola deve essere stretta con una coppia di serraggio di **20Nm** - The valve must be tightened with a torque of **20Nm**

CIRCUITO DI UTILIZZO MCH-22 - PNEUMATIC CIRCUIT MCH-22

Rif. Pos.	Q.tà Q.ty	Codice Code	Descrizione	Description
1	1	13-00-0161-1/4G/R	KIT RUBINETTO SCARICO CONDENSA 1/4	CONDENSATE DISCHARGE BODY VALVE 1/4 KIT
2	1	13-00-0162	NYLON SCARICO CONDENSA	CONDENSATE DISCHARGE NYLON
3	1	RAC/1/8/T/NPT	RACCORDO A 'T' FFF 1/8 NPT	FITTING 'T' FFF 1/8 NPT
4	2	36-07-004	MICROTUBO HP L 900MM 1°/3°STADIO	1ST/3RD STAGE MICRO-PIPE HP L 900 MM
5	1	36-07-005	MANOMETRO FLANGIATO 1°STADIO	1ST STAGE FLANGED GAUGE
6	15	36-07-006	VITE TCEI M3X10 INOX	SCREW TCEI M3X10 STAINLESS
7	15	DA003I	DADO INOX AUTOBLOC. M3	SELF LOCKING NUT M3 INOX
8	3	36-07-008	RACCORDO 90° 1/4NPT - 7/16	FITTING 90° 1/4NPT - 7/16
9	1	36-07-009	TUBO FLESSIBILE L 700MM	FLEX HOSE L 700 MM
10	1	36-07-010	MICROTUBO HP L 1000MM 2°STADIO	2ND STAGE MICRO-PIPE HP L 1000 MM
11	1	36-07-011	MANOMETRO FLANGIATO 2°STADIO	2ND STAGE FLANGED GAUGE
12	1	36-07-012	TUBO FLESSIBILE L 1000MM	FLEX HOSE L 1000 MM
13	1	36-07-013	MANOMETRO FLANGIATO 3°STADIO	3RD STAGE FLANGED GAUGE
14	1	36-05-017	RACCORDO TUBO Ø8 G1/4' CON GUARNIZIONE	FITTING TUBE Ø8 G1/4' WITH GASKET
15	1	36-07-025	TUBO FLESSIBILE H.P. L 500MM	H.P. FLEX HOSE L 500MM
16	1	13-00-0144	RACCORDO 90° 1/8 - 7/16 TUBO 6MM	FITTING 90° 1/8 - TUBO 6MM
17	1	36-07-039/P	TUBO INOX Ø8 H.F. / V.M.P.	STAINLESS PIPE Ø8 H.F. / V.M.P.
18	4	36-07-003	RACCORDO PASSAPARETE 7/16 7/16 MM.44,5	THROUGH-WALL FITTING 7/16 7/16 MM.44,5
19	2	36-05-00220	MICROTUBO 1/4-7/16 1000mm PORTAMANOM.	MICRO-HOSE 1/4-7/16 1000MM
20	1	13-04-0211	MANOMETRO FLANGIATO H.P.	H.P. FLANGED GAUGE
21	2	13-00-0025E	RACCORDO 1/4 G -TUBO 6MM DIRITTO ERMETO	FITTING 1/4 G -PIPE 6MM ERMETO
22	1	36-07-055	MANOMETRO FLANGIATO PRESSIONE OLIO 0-6BAR	OIL PRESSURE FLANGED GAUGE 0-6BAR
23	3	13-04-0225	RACCORDO 1/4 GAS - 1/4 NPT	1/4 GAS-1/4 NPT PIPE FITTING
24	2	13-04-0217	BLOCCHETTO ALLUMINIO RAMPA DI RICARICA	RECHARGE RAMP ALUMINIUM BLOCK
25	5	13-00-0025	RACCORDO 1/4 NPT -TUBO 6MM DIRITTO 7/16	STRAIGHT FITTING 1/4 TUBE 6MM 7/16
26	2	36-06-011	RACCOR.TUBO Ø8 G 1/8' CON GUARNIZIONE	FITTING TUBE Ø8 G1/8' WITH GASKET
27	1	36-07-049/P	TUBO INOX Ø8 COLLEGAMENTO BLOCCHETTI	STAINLESS BLOCK CONNECTION PIPE Ø8
28	1	SC000310	PRESSOSTATO CON MICRO 280 BAR SCALA 0-400	PRESSURE SWITCH 280 BAR
28	1	SC000315	PRESSOSTATO 330BAR	PRESSURE SWITCH 330 BAR
29	4	13-04-0238	TUBO FLESSIBILE H.P. L 1200MM	H.P. FLEX HOSE L 1200 MM
30	1	36-07-002	TUBO FLESSIBILE L.600 MM MCH36	FLEX HOSE L.600 MM MCH36
31	1	36-07-056	MICROTUBO H.P. L 800MM	H.P. MICRO-TUBE L800 MM
32	1	36-07-093	BLOCCHETTO MCH36	MCH36 ALU BLOCK
33	4	RON10I	RONDELLA PIANA M10 INOX DIN125	FLAT WASHER M10 INOX DIN125
34	2	GUAR1319	RONDELLA 1/4 IN RAME	COPPER WASHER 1/4
35	1	SC000492	VALVOLA DI NON RITORNO	CHECK VALVE
36	4	13-00-0137	DADO ZINCATO AUTOBLOC. M6 ALTO	SELF LOCKING NUT M6 HIGH
37	8	RON6I	RONDELLA PIANA M6 INOX DIN125	FLAT WASHER M6 INOX DIN125
38	4	VITE0645I	VITE T.C.E. INOX 6X45	SCREW T.C.E. INOX 6X45
39	1	36-07-066	VALVOLA DI SICUREZZA I° STADIO	1ST STAGE SAFETY VALVE
40	1	36-07-040	RACCORDO G 1/4-7/16 - M-M	FITTING G 1/4-7/16 - M-M
41	1	13-00-0142	RACC. DIRITTO M 1/8 NPT - M 1/8 NPT	FITTING M 1/8 NPT - M 1/8 NPT

CIRCUITO DI UTILIZZO MCH-22 - PNEUMATIC CIRCUIT MCH-22

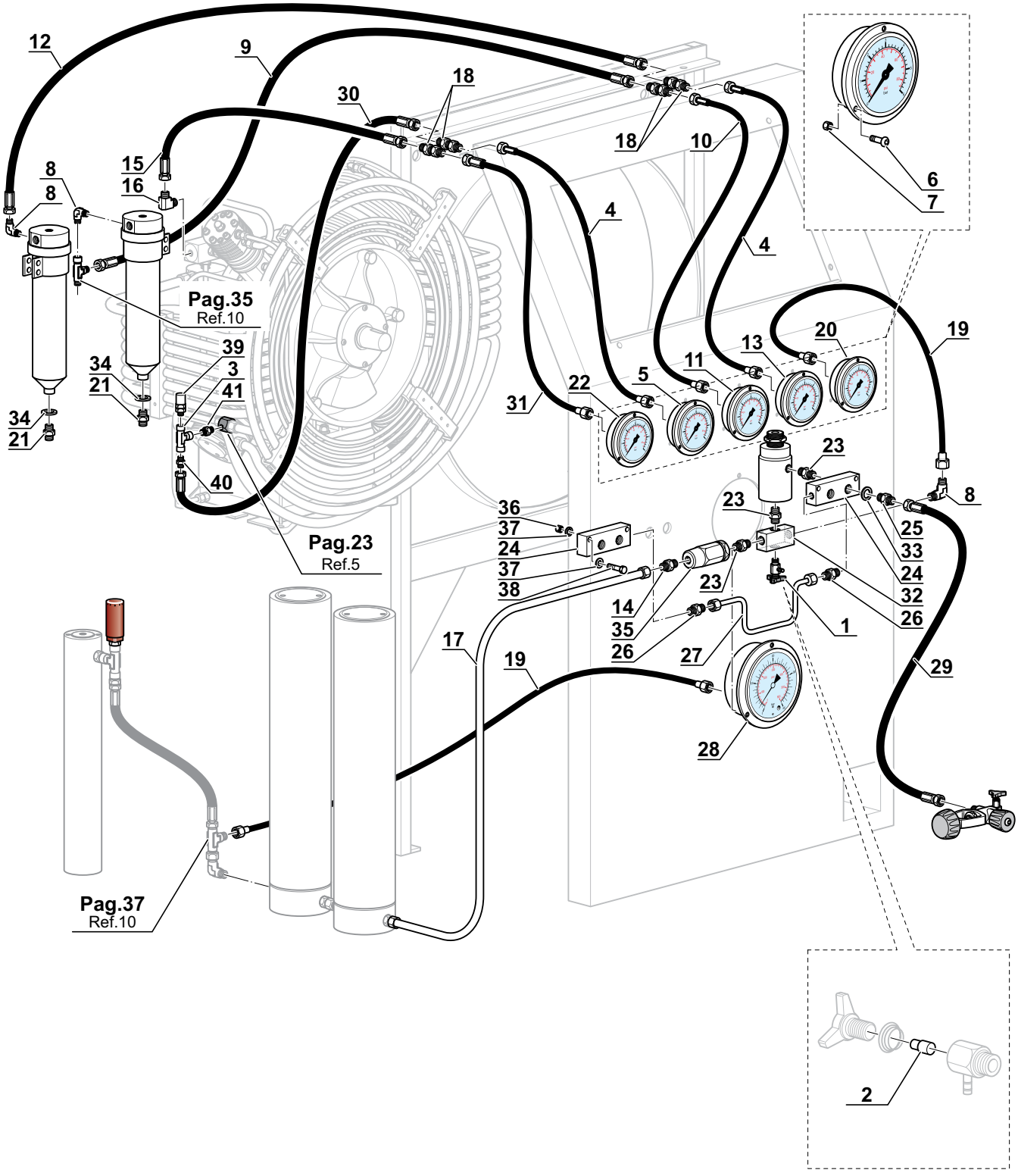

CIRCUITO SCARICO CONDENSA - CONDENSATE DISCHARGE CIRCUIT

Rif. Pos.	Q.tà Q.ty	Codice Code	Descrizione	Description
KIT1	1	36-10-0001/R	KIT UGELLI SCARICO CONDENSA MCH-30-36	KIT NOZZLES CONDENSATE DRAIN MCH-30-36
1.1A	2		UGELLO SCARICO CONDENSA Ø0,8	NOZZLE CONDENSATE DRAIN Ø0,8
1.1B	1		UGELLO SCARICO CONDENSA Ø1,5	NOZZLE CONDENSATE DRAIN Ø1,5
1.1C	1		UGELLO SCARICO CONDENSA Ø2,5	NOZZLE CONDENSATE DRAIN Ø2,5
1.2	3		O RING 2118 90SH (29.87X1.78)	O RING 2118 90SH (29.87X1.78)
1.3	3		O RING 2018 90SH (4,48X1,78)	O RING 2018 90SH (4,48X1,78)
1.4	3		O RING 2100 NBR 90SH	O RING 2100 NBR 90SH
KIT2	1	36-10-0002/R	KIT BLOCCHETTO SCARICO CONDENSA MCH-30-36	KIT CONDENSATE DISCHARGE MCH-30-36
2.1	1		KIT SCARICO CONDENSA 3 VIE MCH-36	KIT CONDENSATE DISCHARGE MCH-36
2.2	3		RACCORDO 90° 1/8 NPT TUBO Ø8 MM RILSAN	FITTING 90° 1/8 NPT TUBE Ø8 MM RILSAN
2.3	1		RACCOR.TUBO Ø8 G 1/8' CON GUARNIZIONE	FITTING TUBE Ø8 G1/8' WITH GASKET
2.4	2		RACCORDO TUBO Ø6 G1/8	FITTING TUBE Ø6 G1/8
2.5	3		KIT RUBINETTO SCARICO CONDENSA 1/8 NPT	CONDENSATE DISCHARGE BODY VALVE1/8 NPT KIT
2.6	1		RACCORDO G 1/4-1/8 NPT	FITTING G 1/4-1/8 NPT
2.7	1	36-07-067	ELETTROVALVOLA L.P. SISTEMA APERTO	L.P. SYSTEM SOL. VALVE OPEN
2.8	1		RACCORDO 90° 1/8 - 7/16 TUBO 6MM	FITTING 90° 1/8 - TUBO 6MM
2.9	1		VITE T.C.E. ZINC. 6X14 DIN912	SCREW T.C.E. ZINC. 6X14 DIN912
KIT3	1	36-10-0003/R	KIT SOSTITUZIONE NUOVO SCARICO CONDENSA	KIT UPGRADE NEW CONDENSATE DISCHARGE
4	1	13-00-0162/N	NYLON SCARICO CONDENSA	CONDENSATE DISCHARGE NYLON
5	3	36-07-065	RACCORDO 90° 1/4 NPT TUBO Ø8	FITTING 90° 1/4 NPT TUBE Ø8
6	1	13-04-0334	FASCETTA INOX 6X D.48/68	CLIP INOX 6X D.48/68
7	1	36-07-080	TUBO S.C. Ø17X22 L. 120 MMMCH36	S.C. PIPE Ø17X22 L. 120 MMMCH36
8	1	36-07-092	TANICA S.C.	S.C. TANK
9	0,8	TUBRILSAN8X6	TUBO RILSAN 8X6	RILSAN HOSE 8X6
10	1	36-07-001	RACCORDO T 716 UNF MMF	UNF MMF "T" FITTING 716
11	1	13-04-0322/AIR	TUBO HP 7/16-7/16 L=500	HOSE HP 7/16-7/16 L=500
12	1	36-07-059	TUBO INOX Ø6 SEPARATORE 2°STADIO	2ND STAGE SEPARATOR Ø6 STAINLESS PIPE
13	1	36-07-061	TUBO INOX Ø6 SEPARATORE 3°STADIO	3RD STAGE SEPARATOR Ø6 STAINLESS PIPE
14	1	36-07-062	TUBO INOX Ø8 SEPARATORE 4°STADIO	4TH STAGE SEPARATOR Ø6 STAINLESS PIPE
15	1	36-05-019	RACCORDO PASSAPARETE	THROUGH-WALL FITTING
16	1	36-07-064/P	TUBO INOX Ø8 S.C.	S.C. STAINLESS PIPE
17	1	36-07-065	RACCORDO 90° 1/8 NPT	90° FITTING 1/8 NPT
18	2	13-00-0093	CAVALLOTTO SEPARATORE 4°STADIO	4TH STAGE SEPARATOR CONNECTOR PLATE
19	4	13-00-0101	DADO M8	NUT M8
20	1	36-05-045	SUPPORTO BLOCCHETTO SCARICO CONDENSA	SUPPORT BLOCK CONDENSATE DRAIN
21	4	36-00-045	VITE TCEI M6x16 INOX MCH36	SCREW TCEI M6x16 INOX MCH36
22	4	RON6I	RONDELLA PIANA M6 INOX	WASHER PLANT INOX M6

CIRCUITO SCARICO CONDENSA - CONDENSATE DISCHARGE CIRCUIT

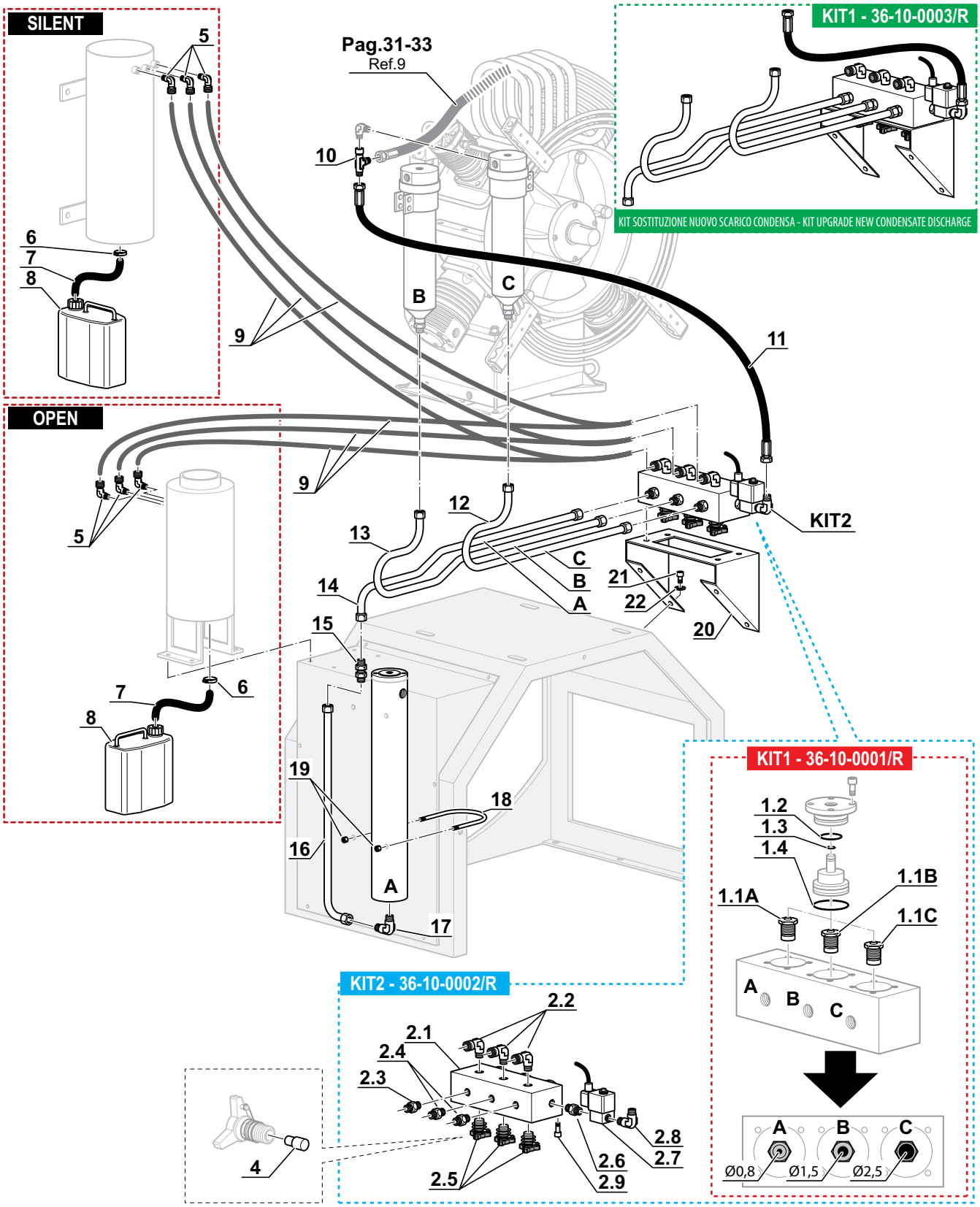

CIRCUITO DI FILTRAGGIO - FILTRATION CIRCUIT

Rif. Pos.	Q.tà Q.ty	Codice Code	Descrizione	Description
KIT1	1	36-07-016/R	KIT SEPARATORE	KIT CONDENSATE DISCHARGE
1.1	1		TAPPO SUPERIORE SEPARATORE 4°STADIO	4TH STAGE SEPARATOR UPPER PLUG
1.2	2		O-RING 6162 NBR90SH (40.65X5,33)	O-RING 6162 NBR90SH (40.65X5,33)
1.3	1		O-RING 3137 NBR90SH (34.60X2.62)	O-RING 3137 NBR90SH (34.60X2.62)
1.4	1		FILTRO SEPARATORE 4°STADIO	4TH STAGE SEPARATOR FILTER
1.5	1		TUBO TAPPO SUPERIORE SEPARATORE 4°STADIO	4TH STAGE SEPARATOR UPPER PLUG PIPE
1.6	1		CORPO SEPARATORE 4°STADIO	4TH STAGE SEPARATOR BODY
1.7	1		TAPPO INFERIORE SEPARATORE 4°STADIO	4TH STAGE SEPARATOR LOWER PLUG
1.8	1		RACCORDO 1/4 GAS - 1/4 NPT	FITTING 1/4 GAS - 1/4 NPT
KIT2	1	13-10-0001/TP/R	KIT RACCORDI 1/4 COLLEGAMENTO 2 HYYPERFILTER	KIT FITTINGS 1/4 CONNECTION 2 HYYPERFILTER
2.1	1		RACCORDO ERMETO 1/4 - TUBO Ø8	FITTING ERMETO 1/4 - TUBE Ø8
2.2	1		DADO PER RACCORDO ERMETO TUBO Ø8	NUT FOR FITTING ERMETO TUBE Ø8
2.3	1		ANELLO OGIVA Ø8M	OGIVE RING Ø8M
2.4	1		RACCORDO ERMETO G1/4-M14X1.5	FITTING ERMETO G1/4-M14X1.5
2.5	2		RONDELLA 1/4 IN RAME	COPPER WASHER 1/4
3	1	36-05-017	RACCORDO TUBO Ø8 G1/4' CON GUARNIZIONE	FITTING TUBE Ø8 G1/4' WITH GASKET
4	1	13-04-0225	RACCORDO 1/4 GAS - 1/4 NPT	FITTING 1/4 GAS - 1/4 NPT
5	1	RAC/1/4/T	RACCORDO A 'T' FFF 1/4	FITTING 'T' FFF 1/4
6	2	13-00-0093	CAVALLOTTO SEPARATORE 4°STADIO	4TH STAGE SEPARATOR CONNECTOR PLATE
7	4	13-00-0101	DADO M8	NUT M8
8	1	36-07-025	TUBO FLESSIBILE H.P. L 500MM	H.P. FLEX HOSE L 500MM
9	1	13-00-0025	RACCORDO 1/4 G -TUBO 6MM DIRITTO	FITTING 1/4 G -PIPE 6MM
10	1	RACC4R6MXS	RACC. T GIREVOLE TUBO 6-7/16 F/M/M	FITTING T TUBE 6 7/16 F/M/M R6X-S-6 4R6MXS
11	4	VITE1020	VITE T.E. ZINC. 10X20	SCREW T.E. ZINC. 10X20
12	4	RON10ZG	RONDELLA PIANA M10 ZINC. DIN 125 (10,5X20,5X2)	WASHER M10 ZINC. DIN 125 (10,5X20,5X2)
13	1	36-07-008	RACCORDO 90° 1/4NPT - 7/16	FITTING 90° 1/4NPT - 7/16
14	1	36-07-014/P	TUBO INOX Ø8 4°STADIO / SEPARATORE	4TH STAGE/SEPARATOR Ø8 STAINLESS STEEL PIPE
15	1	13-00-0125	RACCORDO DIRITTO 7/16UNF - 1/4GAS	FITTING 7/16UNF - 1/4GAS
16	1	36-07-038	RACCORDO TUBO Ø8 G3/8	FITTING TUBE Ø8 G3/8
17	1	36-07-008	RACCORDO 90° 1/4NPT - 7/16	FITTING 90° 1/4NPT - 7/16
18	1	RACC-8F640	RACC. 8F640MXS 12/JD 094	FITTING 8F640MXS 12/JD 094
19	1	RACC-8F40MXS	RACC. 8F40MXS 04/JE 095	FITTING 8F40MXS 04/JE 095

CIRCUITO DI FILTRAGGIO - FILTRATION CIRCUIT

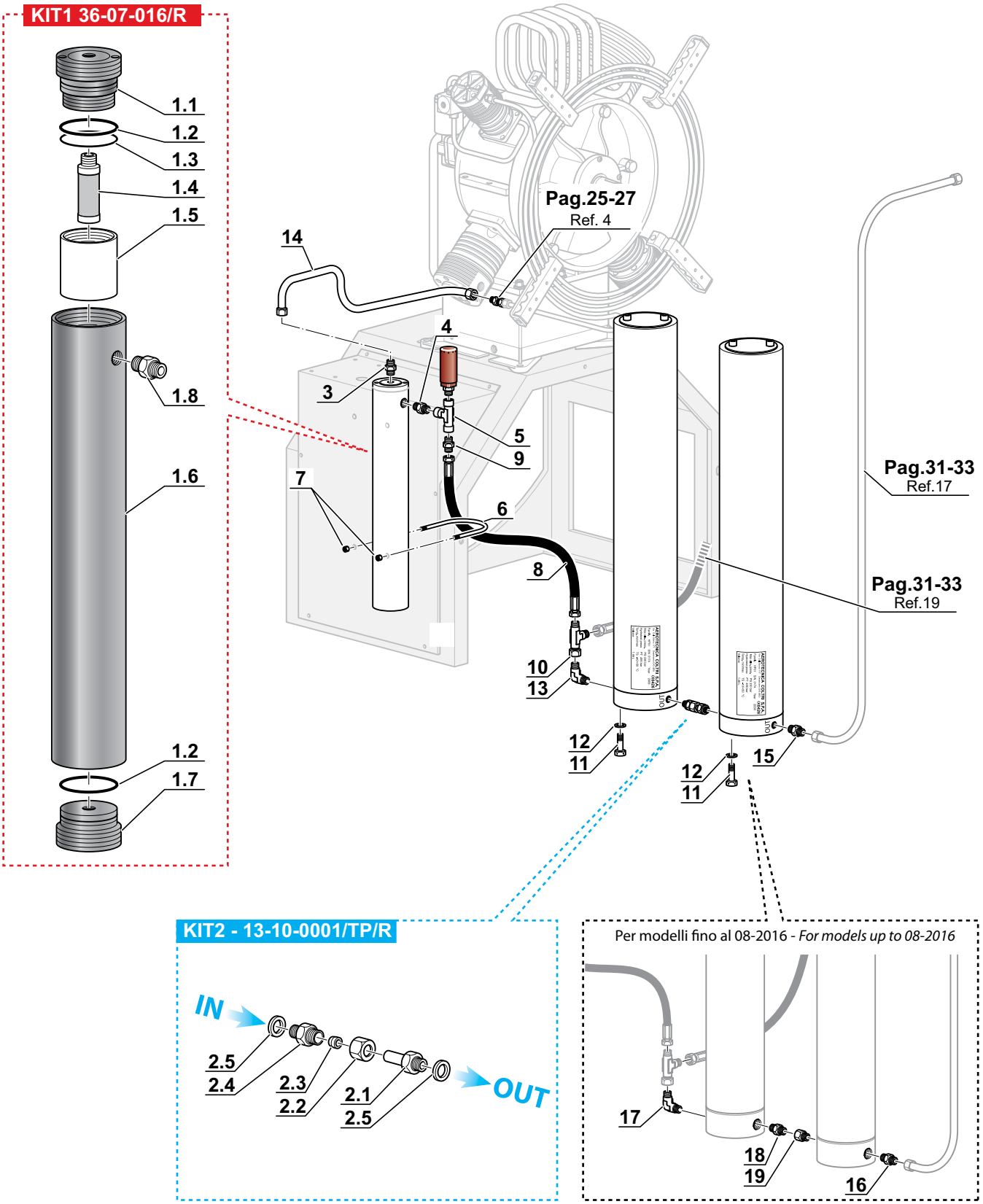

HYPERFILTER
HYPERFILTER

Rif. Pos.	Q.tà Q.ty	Codice Code	Descrizione	Description
KIT1	1	RE100368	HYPER FILTER (senza cartuccia Hyper)	HYPER FILTER (without Hyper cartridge)
1.1	1		MOLLA CARTUCCIA HYPER FILTER	HYPERFILTER CARTRIDGE SPRING
1.2	1		CORPO HYPER FILTER 110MM	HYPERFILTER BODY 110MM
1.3	2		VITE T.C.E. ZINC. 10X16 DIN912	SCREW T.C.E. ZINC. 10X16 DIN912
1.4	1		TAPPO SUPERIORE SENZA SENSORE	UPPER PLUG WITHOUT SENSOR
1.5	2		O-RING 6262 NBR90	O-RING 6262 NBR90
1.6	1		TAPPO INFERIORE HYPER FILTER FORI DA 1/4G	LOWER CAP HYPERFILTER HOLES TO 1/4G
KIT2a	1	36-07-034/B-AC	CARTUCCIA HYPERFILTER CARB. ATT./SET.MOL.	HYPERFILTER ACT. CARB./MOLEC. SIEVE CARTRIDGE
KIT2b	1	36-07-034/A-MS	CARTUCCIA HYPERFILTER SETACCIO MOLECOLARE	HYPERFILTER MOLECULAR SIEVE CARTRIDGE
KIT2c	1	36-07-034/CAR	CARTUCCIA HYPERFILTER CARBONE ATTIVO	HYPERFILTER ACTIVE CARBON CARTRIDGE
KIT2d	1	36-07-034/B-AC/MOL	CARTUCCIA HYPERFILTER CARB./SET./HOPKALITE	HYPERFILTER CARBON/SIEVE/HOPKALITE CARTRIDGE
2.1	1		GANCIO INOX CARTUCCIA HYPERFILTER	STEEL HOOK HYPERFILTER CARTRIDGE
2.2	1		TAPPO SUPERIORE CARTUCIA HYPERFILTER	TOP CAP HYPERFILTER CARTRIDGE
2.3	2		O-RING 3237/70SH (60x2.62)	O-RING 3237/70SH (60x2.62)
2.4	1		CORPO CARTUCCIA HYPERFILTER	CARTRIDGE BODY HYPERFILTER CARTRIDGE
2.5	6		DISCO FELTRO 66x11	FELT DISC 66x11
2.6	1		SETACCIO MOLECOLARE	MOLECULAR SIEVE
2.7	1		CARBONE ATTIVO GRANULARE	ACTIVE CARBON
2.8	1		DISCO INOX FORATO HYPERFILTER	INOX DISC HYPERFILTER CARTRIDGE
2.9	1		MOLLA CARTUCCIA HYPER FILTER	SPRING HYPERFILTER CARTRIDGE
2.10	1		TAPPO INFERIORE CARTUCCIA FILTRO PRESEC	LOWER CAP PRESEC FILTER CARTRIDGE
2.11	1		RACC. TAPPO INFERIORE CARTUCCIA HYPERFILTER	LOWER FITTING HYPERFILTER CARTRIDGE
2.12	1		O-RING 115 NBR 90 (11,91X2,62)	O-RING 115 NBR 90 (11,91X2,62)
2.13	1		O-RING 112 NBR 90	O-RING 112 NBR 90
2.14	1		FISSATORE MONOSSIDO DI CARBONIO 814	CO CATALYST MOLECULITE 814

HYPERFILTER
HYPERFILTER

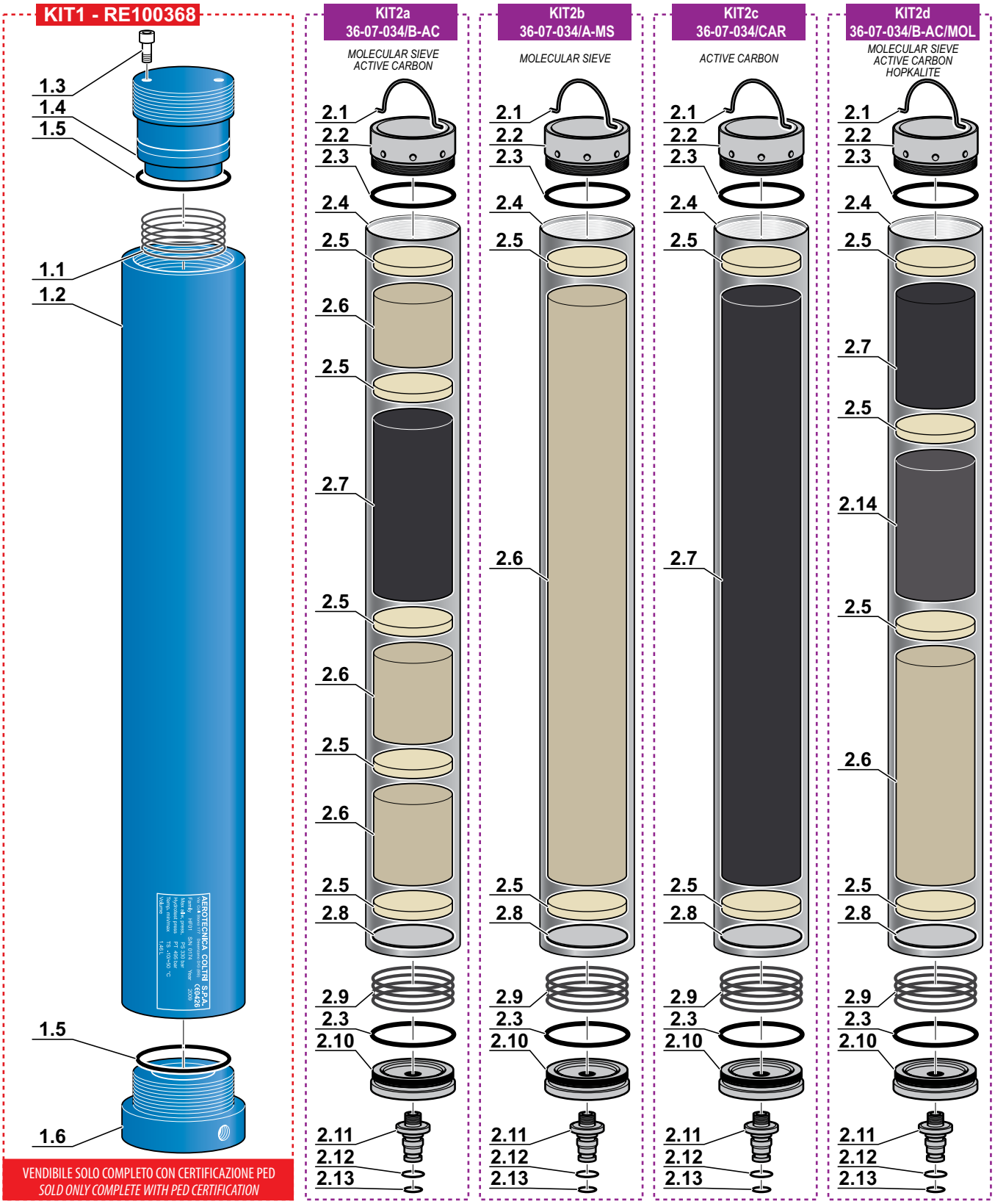

HYPERFILTER CON PRESEC
HYPERFILTER WITH PRESEC

Rif. Pos.	Q.tà Q.ty	Codice Code	Descrizione	Description
KIT1	1	RE100366	HYPER FILTER PRESEC (senza cartuccia Hyper)	HYPER FILTER PRESEC (without Hyper cartridge)
1.1	1		MOLLA CARTUCCIA HYPER FILTER	HYPERFILTER CARTRIDGE SPRING
1.2	1		CORPO HYPER FILTER	HYPERFILTER BODY
1.3	1	SC000567	CONNETTORE PRESEC	PRESEC CONNECTOR
1.4	2		VITE T.C.E. ZINC. 10X16 DIN912	SCREW T.C.E. ZINC. 10X16 DIN912
1.5	1		TAPPO SUPERIORE CON SENSORE HYPER FILTER	UPPER PLUG WITH SENSOR
1.6	2		O-RING 6250 NBR90 (62.87x5.34)	O-RING 6250 NBR90 (62.87x5.34)
1.7	1	SC000526	SENSORE PRESEC	PRESEC SENSOR
1.8	1		TAPPO INFERIORE HYPER FILTER FORI DA 1/4G	LOWER CAP HYPERFILTER HOLES TO 1/4G
KIT2a	1	SC000543	CARTUCCIA HYPERFILTER PRESEC CARB./SET.	HYPERFILTER PRESEC CARBON/SIEVE CARTRIDGE
KIT2b	1	SC000543/CO	CARTUCCIA HYPERFILTER PRESEC CARB./SET./HOPKALITE	HYPERFILTER PRESEC CARB./SIEVE/HOPK. CARTRIDGE
2.1	1		GANCIO INOX CARTUCCIA HYPERFILTER	STEEL HOOK HYPERFILTER CARTRIDGE
2.2	1		TAPPO SUPERIORE CARTUCIA HYPERFILTER	TOP CAP HYPERFILTER CARTRIDGE
2.3	2		O-RING 3237/70SH (60x2.62)	O-RING 3237/70SH (60x2.62)
2.4	1		CORPO CARTUCCIA HYPERFILTER	CARTRIDGE BODY HYPERFILTER CARTRIDGE
2.5	6		DISCO FELTRO 66x11	FELT DISC 66x11
2.6	1		SETACCIO MOLECOLARE	MOLECULAR SIEVE
2.7	1		CARBONE ATTIVO GRANULARE	ACTIVE CARBON
2.8	1		DISCO INOX FORATO HYPERFILTER	INOX DISC HYPERFILTER CARTRIDGE
2.9	1		MOLLA CARTUCCIA HYPER FILTER	SPRING HYPERFILTER CARTRIDGE
2.10	1		TAPPO INFERIORE CARTUCCIA FILTRO PRESEC	LOWER CAP PRESEC FILTER CARTRIDGE
2.11	1		RACC. TAPPO INFERIORE CARTUCCIA HYPERFILTER	LOWER FITTING HYPERFILTER CARTRIDGE
2.12	1		O-RING 115 NBR 90 (11,91X2,62)	O-RING 115 NBR 90 (11,91X2,62)
2.13	1		O-RING 112 NBR 90	O-RING 112 NBR 90
2.14	1		FISSATORE MONOSSIDO DI CARBONIO 814	CO CATALYST MOLECULITE 814
2.15	1		ANELLO SEEGER A7	SEEGER A7
2.16	1		ANELLO SEEGER A14	SEEGER A14
2.17	1		FLANGIA PVC PORTA SENSORE	FLANGE PVC HOLDER SENSOR
2.18	1		SENSORE PRESEC	PRESEC SENSOR
2.19	1		DISCO ALL. SENSORE PRESEC 38X3X1MM	ALUMINUM RING PRESEC 38X3X1MM
2.20	1		VITE TC 3x5	SCREW TC 3x5
2.21	1		DISCO FELTRO PRESEC CON FORO DIAM. 16 66X11	PERFORATED FELT DISC 66x11

HYPERFILTER CON PRESEC
HYPERFILTER WITH PRESEC

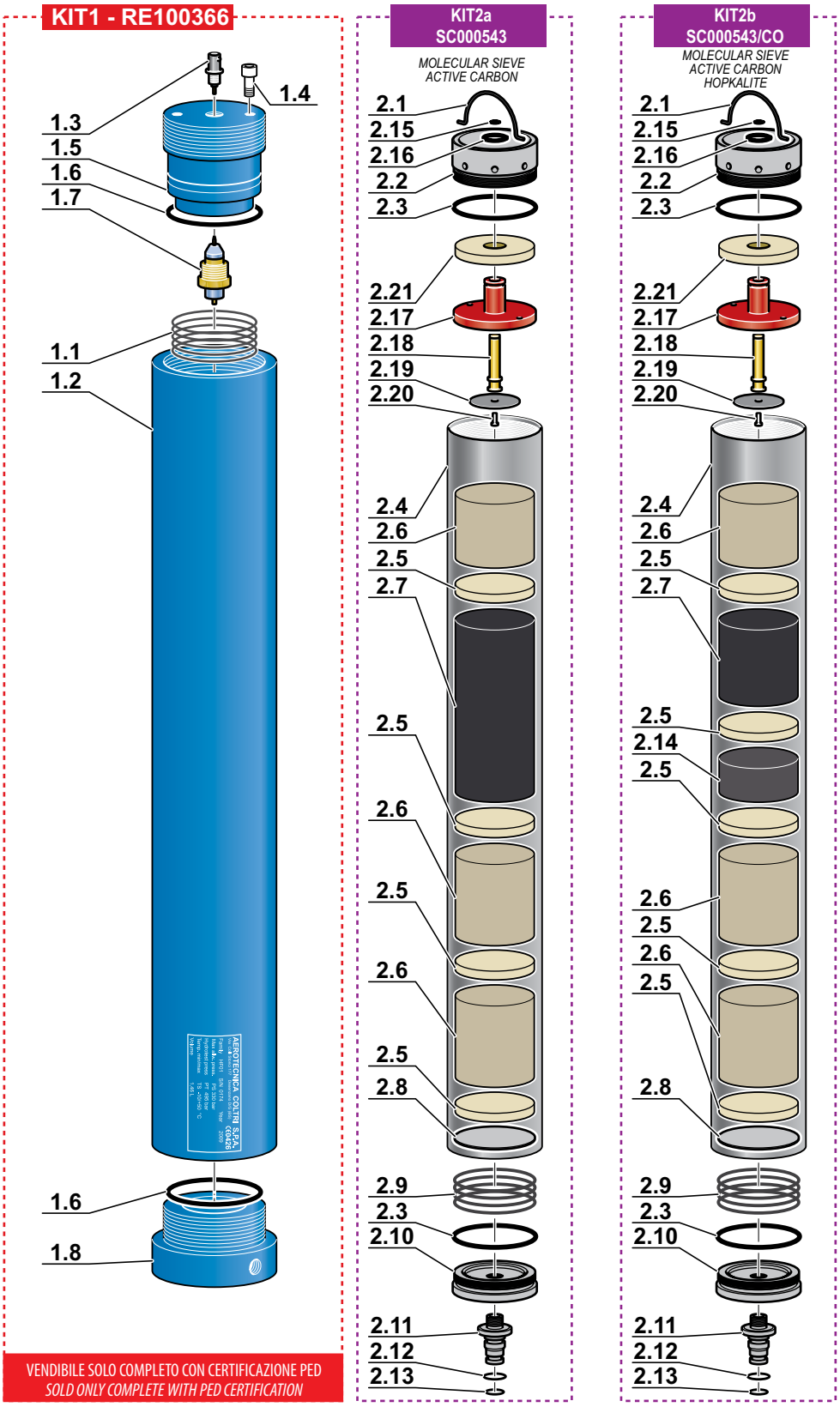

VALVOLA DI SICUREZZA - SAFETY VALVE

Rif. Pos.	Q.tà Q.ty	Codice Code	Descrizione	Description
1a	1	6-05-015/2/232	VALVOLA DI SICUREZZA (232 BAR / 3300 PSI)	SAFETY VALVE (232 BAR / 3300 PSI)
1b	1	6-05-015/2/250	VALVOLA DI SICUREZZA (250 BAR / 3600 PSI)	SAFETY VALVE (250 BAR / 3600 PSI)
1c	1	6-05-015/2/300	VALVOLA DI SICUREZZA (300 BAR / 4300 PSI)	SAFETY VALVE (300 BAR / 4300 PSI)
1d	1	6-05-015/2/330	VALVOLA DI SICUREZZA (330 BAR / 4700 PSI)	SAFETY VALVE (330 BAR / 4700 PSI)
1e	1	6-05-015/2/360	VALVOLA DI SICUREZZA (360 BAR / 5200 PSI)	SAFETY VALVE (360 BAR / 5200 PSI)
1f	1	6-05-015/2/445	VALVOLA DI SICUREZZA (445 BAR / 6400 PSI)	SAFETY VALVE (445 BAR / 6400 PSI)
2	1	OR-114/90	O-RING 114 NBR90SH	O-RING 114 NBR90SH
3	1	36-05-070	RACCORDO VALVOLA SICUREZZA 1/4G-M12X1,25	SAFETY VALVE FITTING 1/4G-M12X1,25

VALVOLA MANTENIMENTO PRESSIONE - PRESSURE MAINTENANCE VALVE

Rif. Pos.	Q.tà Q.ty	Codice Code	Descrizione	Description
KIT1	1	36-07-044	VALVOLA MANTENIMENTO PRESSIONE MCH-36	PRESSURE MAINTENANCE VALVE MCH36
1.1	1		VITE VALVOLA MANTENIMENTO MCH 13/16	MAINTENANCE VALVE SCREW MCH13/16
1.2	1		O RING 2025 NBR90SH (6,07X1,78)	O RING 2025 NBR90SH (6,07X1,78)
1.3	1		PISTONE VALVOLA MANTENIMENTO MCH 13/16	MAINTENANCE VALVE PISTON MCH13/16
1.4	1		O RING 2015 NBR90SH (3,69X1,78)	O RING 2015 NBR90SH (3,69X1,78)
1.5	1		RONDELLA TEFLON PER PISTONE VMP	TEFLON RING VMP PISTON
1.6	1		CORPO VALVOLA MANTENIMENTO MCH 13/16 1/4NPT	MAINTENANCE VALVE BODY MCH13/16 1/4 NPT
1.7	1		DISTANZIALE MOLLA PISTONE VPM	VMP PISTON SCREW SPACER
1.8	1		MOLLA VALVOLA SICUREZZA	SAFETY VALVE SPRING
1.9	1		CAPPUCCIO VALVOLA MANT.PRESS. ALL.	VMP CAP
1.10	1		DADO VMP ALL. M20X1,5	VMP NUT M20X1,5

VALVOLA DI SICUREZZA - SAFETY VALVE

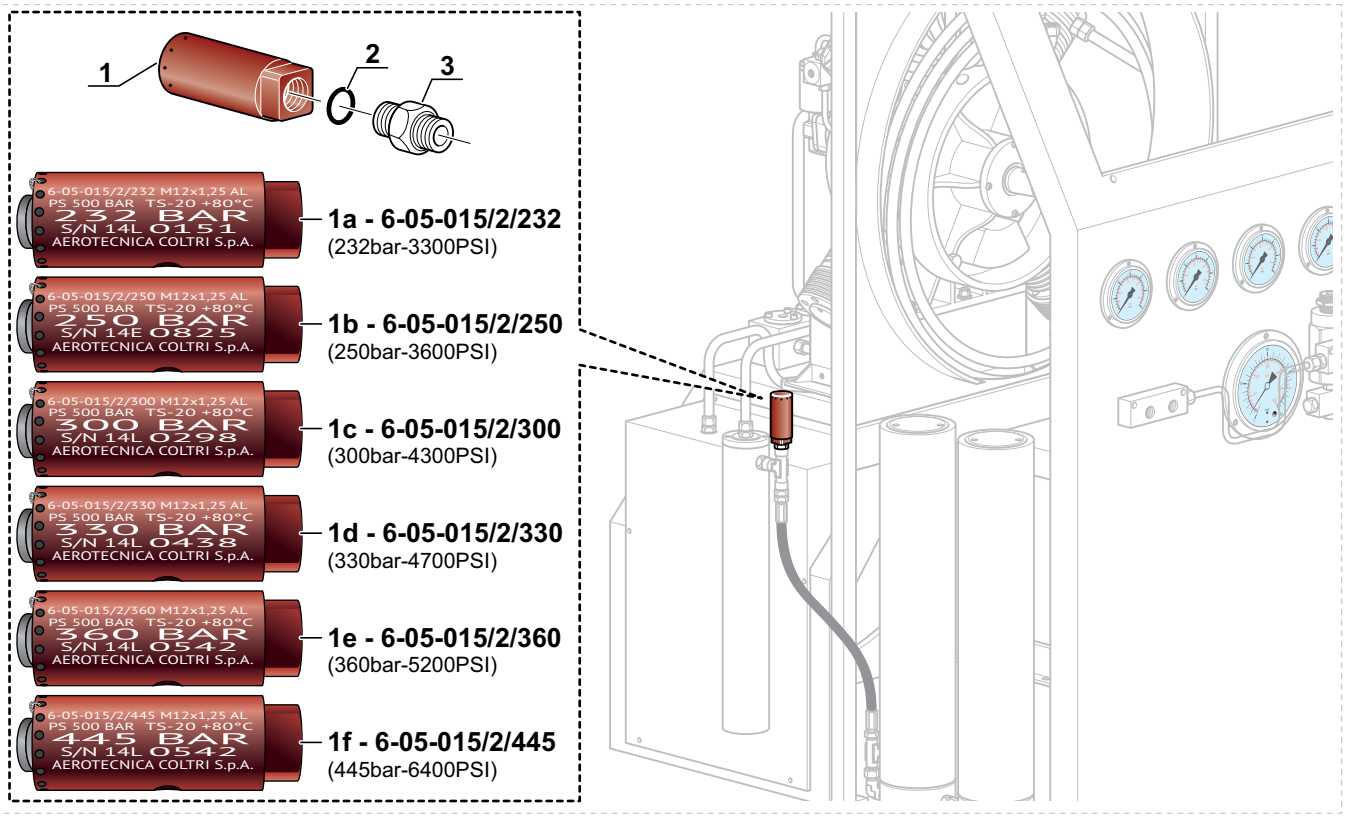

VALVOLA MANTENIMENTO PRESSIONE - PRESSURE MAINTAINING VALVE

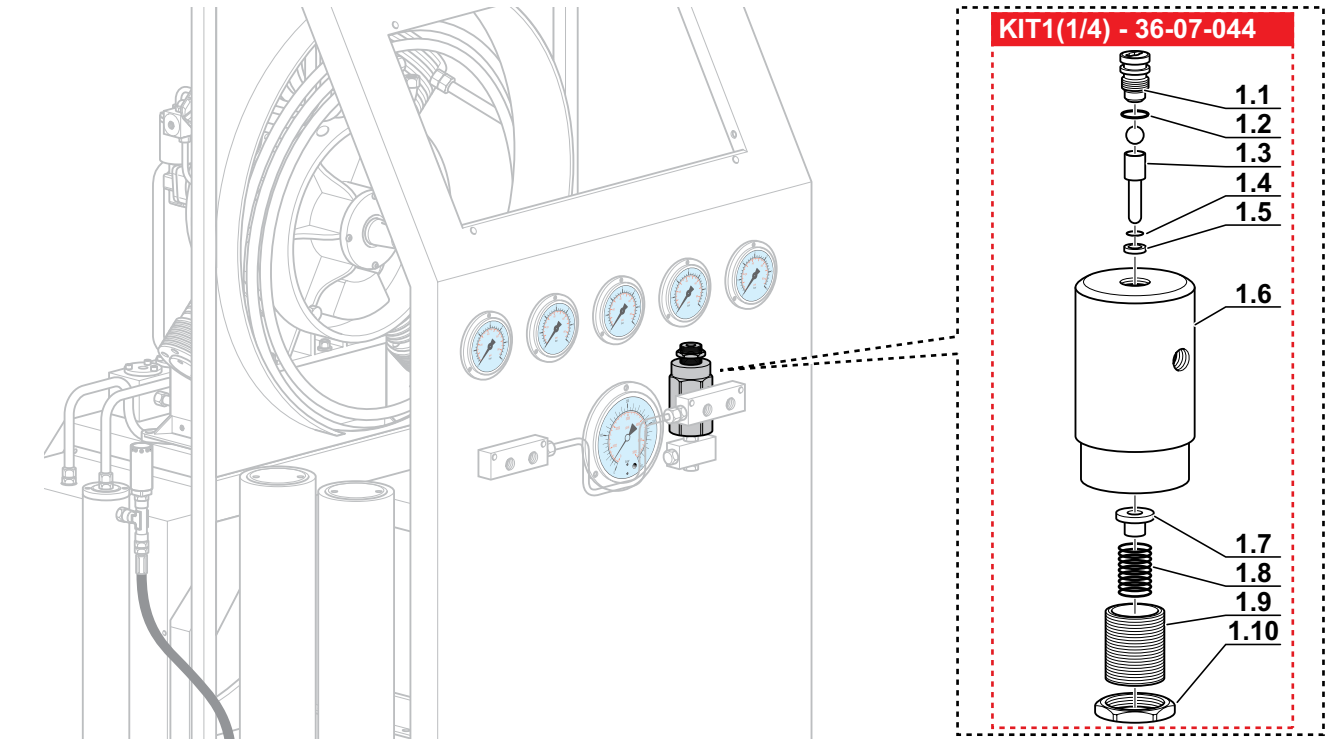

CARPENTERIA SILENT - SILENT FRAME

Rif. Pos.	Q.tà Q.ty	Codice Code	Descrizione	Description
KIT1	1	SC30-36/SILENT	TELAIO MCH-30-36 SILENT	MCH-30-36 SILENT FRAME
1.1	1		BASAMENTO TELAIO	FRAME BASE
1. 2	4		PIEDINO IN GOMMA (75x25)	RUBBER FOOT (75x25)
1. 3	4		PIEDINO DOPPIO ATTACCO M12	DOUBLE CONNECTOR FOOT
1. 4	1		SUPPORTO COMPRESSORE	COMPRESSOR SUPPORT
1. 5	1		STAFFA FISSAGGIO MOTORE	MOTOR FIXING BRACKET
1. 6	1		SUPPORTO MOTORE	MOTOR SUPPORT
1. 7	1		SUPPORTO SEPARATORE HP	HP SEPARATOR SUPPORT
1. 8	1		PANNELLO INTERNO	INTERNAL PANEL
1. 9	1		PANNELLO POSTERIORE	REAR PANEL
1. 10	1		PANNELLO INFERIORE	LOWER PANEL
1. 11	1		PANNELLO SUPERIORE	UPPER PANEL
1. 12	1		COPERCHIO SILENZIATORE	SILENCER COVER
1. 13	1		COPERCHIO POSTERIORE	REAR COVER
1. 14	1		SUPPORTO TANICA SCARICO CONDENSA	TANK SUPPORT
1. 15	2		PANNELLO LATERALE POSTERIORE	REAR SIDE PANEL
1. 16	2		PANNELLO LATERALE CENTRALE	CENTRAL SIDE PANEL
1. 17	1		PANNELLO SINISTRO	LEFT PANEL
1. 18	1		PANNELLO DESTRO	RIGHT PANEL
1. 19	1		PANNELLO ANTERIORE	FRONT PANEL
1. 20	1		CARTER SCATOLA ELETTRICA	JUNCTION BOX COVER
1. 21	1		PANNELLO DI COMANDO	CONTROL PANEL
1. 22	12		DADO ZINCATO AUTOBLOC. M12	NUT ZINC. AUTOBLOC. M12
1. 23	16		RONDELLA PIANA M12 ZINCATA	WASHER PLANT ZINC. M12
1. 24	4		VITE T.E. ZINC. 12X40 UNI 5739	SCREW T.E. ZINC. 12X40
1. 25	2		VITE T.E. ZINC. 10X20	SCREW T.E. ZINC. 10X20
1. 26	4		RONDELLA PIANA M10 ZINCATA	WASHER PLANT ZINC. M10
1. 27	20		VITE T.C.E. ZINC. 6X30 DIN912	SCREW T.C.E. ZINC. 6X30 DIN912
1. 28	28		VITE T.C.E. ZINC. 6X20 DIN912	SCREW T.C.E. ZINC. 6X20 DIN912
1. 29	28		RONDELLA PIANA ZINC. M6	WASHER PLANT ZINC. M6
1. 30	2		DADO ZINCATO AUTOBL. M10 ALTO DIN982	NUT ZINC. AUTOBLOC. M10
1. 31	8		SERRATURA LATERALE	SIDE LOCK
1. 32	36		VITE INOX 5X16 TESTA SVASATATAGLIO CROCE	SCREW INOX 5X16 TSC
1. 33	8		CERNIERA SPORTELLO	DOOR HINGE
1.34	1		SERRATURA	LOCK
1.35	2		CERNIERA QUADRO ELETTRICO	ELECTRICAL DOOR HINGE
1.36	4		VITE INOX 5X16 TESTA SVASATATAGLIO CROCE	SCREW INOX 5X16 TSC
1.37	1		PANNELLINO COPRI PRESEC	PRESEC PANEL

N.B. = Il telaio viene venduto e spedito assemblato
N.B. = *The frame is sold and ship assembled*

CARPENTERIA SILENT - SILENT FRAME

KIT 1

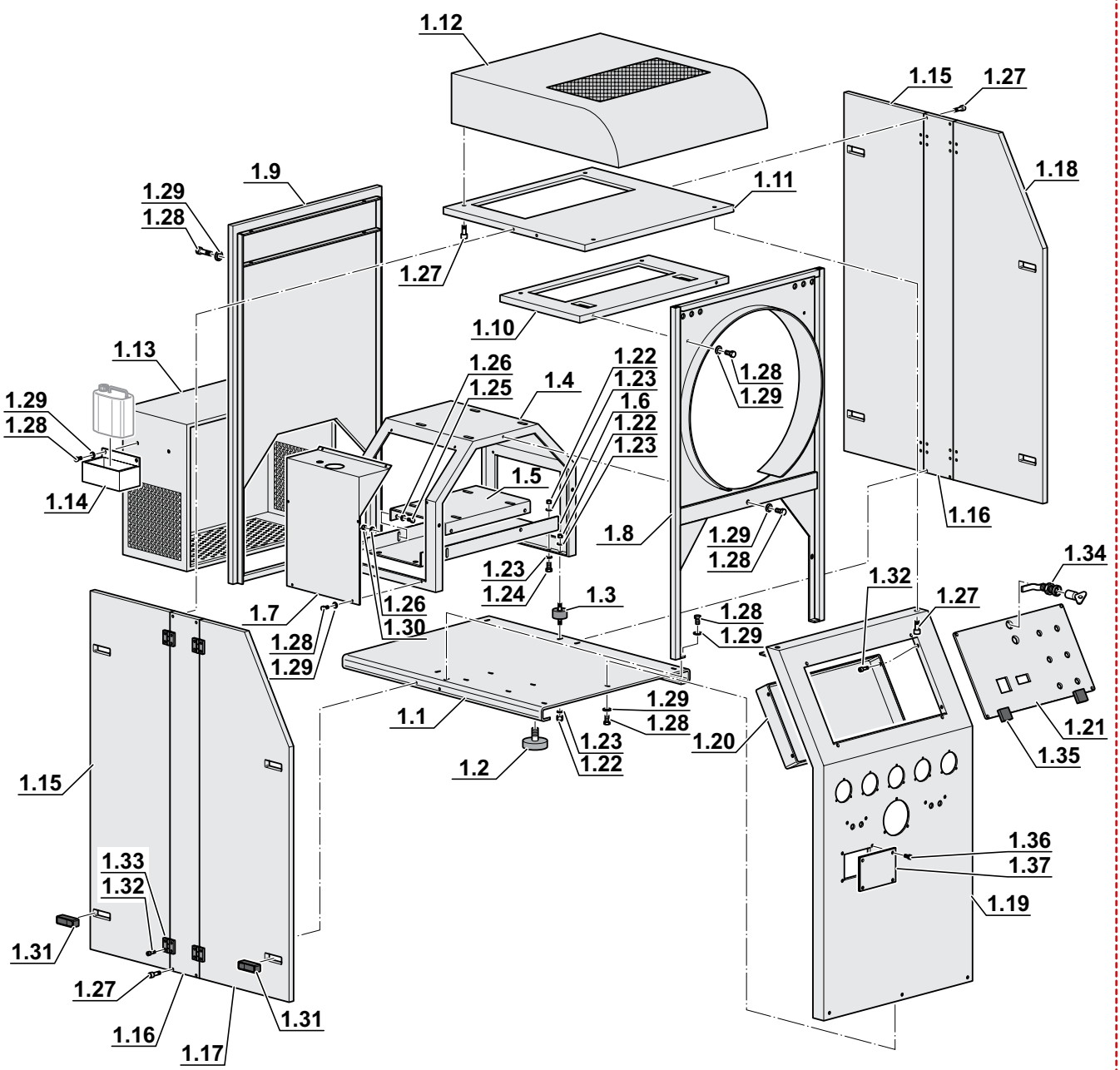

CARPENTERIA OPEN - OPEN FRAME

Rif. Pos.	Q.tà Q.ty	Codice Code	Descrizione	Description
KIT1	1	SC36COMPACT	TELAIO MCH-30-36 SILENT	MCH-30-36 SILENT FRAME
1.1	1		BASAMENTO TELAIO	FRAME BASE
1. 2	4		PIEDINO IN GOMMA (75x25)	RUBBER FOOT (75x25)
1. 3	4		PIEDINO DOPPIO ATTACCO	DOUBLE CONNECTOR FOOT
1. 4	1		SUPPORTO COMPRESSORE	COMPRESSOR SUPPORT
1. 5	1		STAFFA FISSAGGIO MOTORE	MOTOR FIXING BRACKET
1. 6	1		SUPPORTO MOTORE	MOTOR SUPPORT
1. 7	1		SUPPORTO SEPARATORE HP	HP SEPARATOR SUPPORT
1. 8	1		RETE POSTERIORE MOD. OPEN	REAR MESH MOD. OPEN
1. 9	1		RETE LATERALE MOD. OPEN	SIDE MESH MOD. OPEN
1. 10	1		PANNELLO SUPERIORE	UPPER PANEL
1. 11	1		PANNELLO INTERNO	INTERNAL PANEL
1. 12	2		PANNELLO LATERALE CENTRALE	CENTRAL SIDE PANEL
1. 13	1		PANNELLO SINISTRO	LEFT PANEL
1. 14	1		PANNELLO DESTRO	RIGHT PANEL
1. 15	1		PANNELLO ANTERIORE	FRONT PANEL
1. 16	1		CARTER SCATOLA ELETTRICA	JUNCTION BOX COVER
1. 17	1		PANNELLO DI COMANDO	CONTROL PANEL
1. 18	2		VITE T.E. ZINC. 10X20	SCREW T.E. ZINC. 10X20
1. 19	4		RONDELLA PIANA M10 ZINCATA	WASHER PLANT ZINC. M10
1. 20	2		DADO ZINCATO AUTOBL. M10 ALTO DIN982	NUT ZINC. AUTOBLOC. M10
1. 21	12		DADO ZINCATO AUTOBLOC. M12	NUT ZINC. AUTOBLOC. M12
1. 22	16		RONDELLA PIANA M12 ZINCATA	WASHER PLANT ZINC. M12
1. 23	4		VITE T.E. ZINC. 12X40 UNI 5739	SCREW T.E. ZINC. 12X40
1. 24	10		VITE T.C.E. ZINC. 6X30 DIN912	SCREW T.C.E. ZINC. 6X30 DIN912
1. 25	14		VITE T.C.E. ZINC. 6X20 DIN912	SCREW T.C.E. ZINC. 6X20 DIN912
1. 26	14		RONDELLA PIANA ZINC. M6	WASHER PLANT ZINC. M6
1. 27	4		SERRATURA LATERALE ANTERIORE	FRONT SIDE LOCK
1. 28	4		CERNIERA SPORTELLO	DOOR HINGE
1. 29	20		VITE INOX 5X16 TESTA SVASATATAGLIO CROCE	SCREW INOX 5X16 TSC
1. 30	2		CERNIERA QUADRO ELETTRICO	ELECTRICAL DOOR HINGE
1. 31	12		RONDELLA PIANA ZINC. M6	WASHER PLANT ZINC. M6
1. 32	12		VITE T.C.E. ZINC. 6X20 DIN912	SCREW T.C.E. ZINC. 6X20 DIN912
1.33	4		VITE INOX 5X16 TESTA SVASATATAGLIO CROCE	SCREW INOX 5X16 TSC
1.34	1		PANNELLINO COPRI PRESEC	PRESEC PANEL

N.B. = Il telaio viene venduto e spedito assemblato
N.B. = *The frame is sold and ship assembled*

CARPENTERIA OPEN - OPEN FRAME

KIT 1

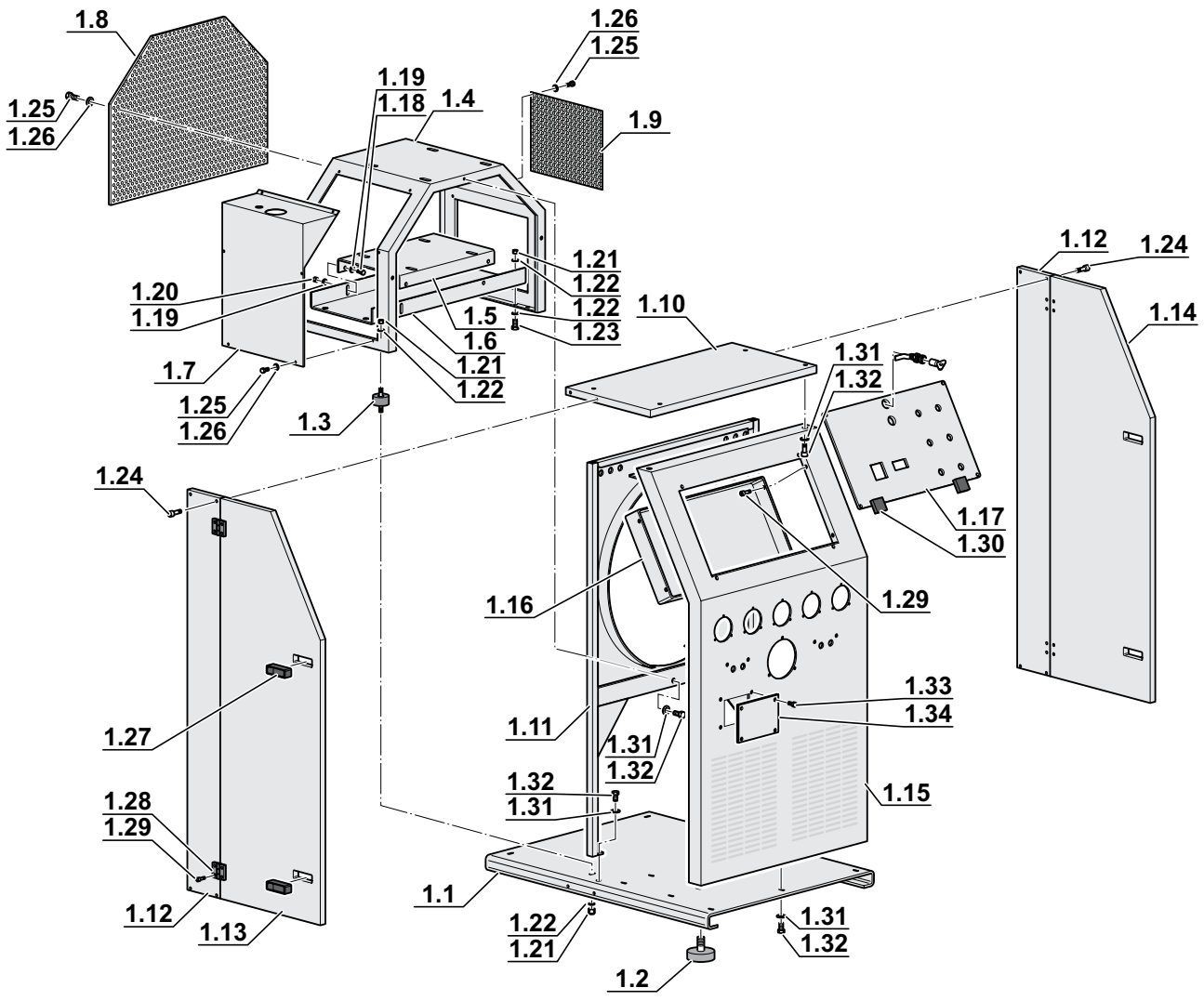

TARGHETTE DI SICUREZZA - SAFETY INFO LABEL

Rif. Pos.	Q.tà Q.ty	Codice Code	Descrizione	Description
1	1	ADES/PANNELLO/MCH36	ADESIVO PANNELLO DI COMANDO	COMMAND PANNEL STICKER
2	1	ADES/5FORI/MANOM	ADESIVO PANNELLO DI CONTROLLO	CONTROL PANNEL STICKER
3	1	ADES/SER/MCH6	ADESIVO ISTRUZIONI MCH6	INSTRUCTIONS STICKER
4a	1	ADESIVO/232	ADESIVO PRESSIONE 232 BAR	PRESSURE STICKER 232 BAR
4b	1	ADESIVO/300	ADESIVO PRESSIONE 300 BAR	PRESSURE STICKER 300 BAR
4c	1	ADESIVO/330	ADESIVO PRESSIONE 330 BAR	PRESSURE STICKER 330 BAR
4d	1	ADESIVO/420	ADESIVO PRESSIONE 420 BAR	PRESSURE STICKER 420 BAR
5	1	ADES/USO	ADESIVO USO	USE STICKER

TARGHETTE DI SICUREZZA - SAFETY INFO LABEL

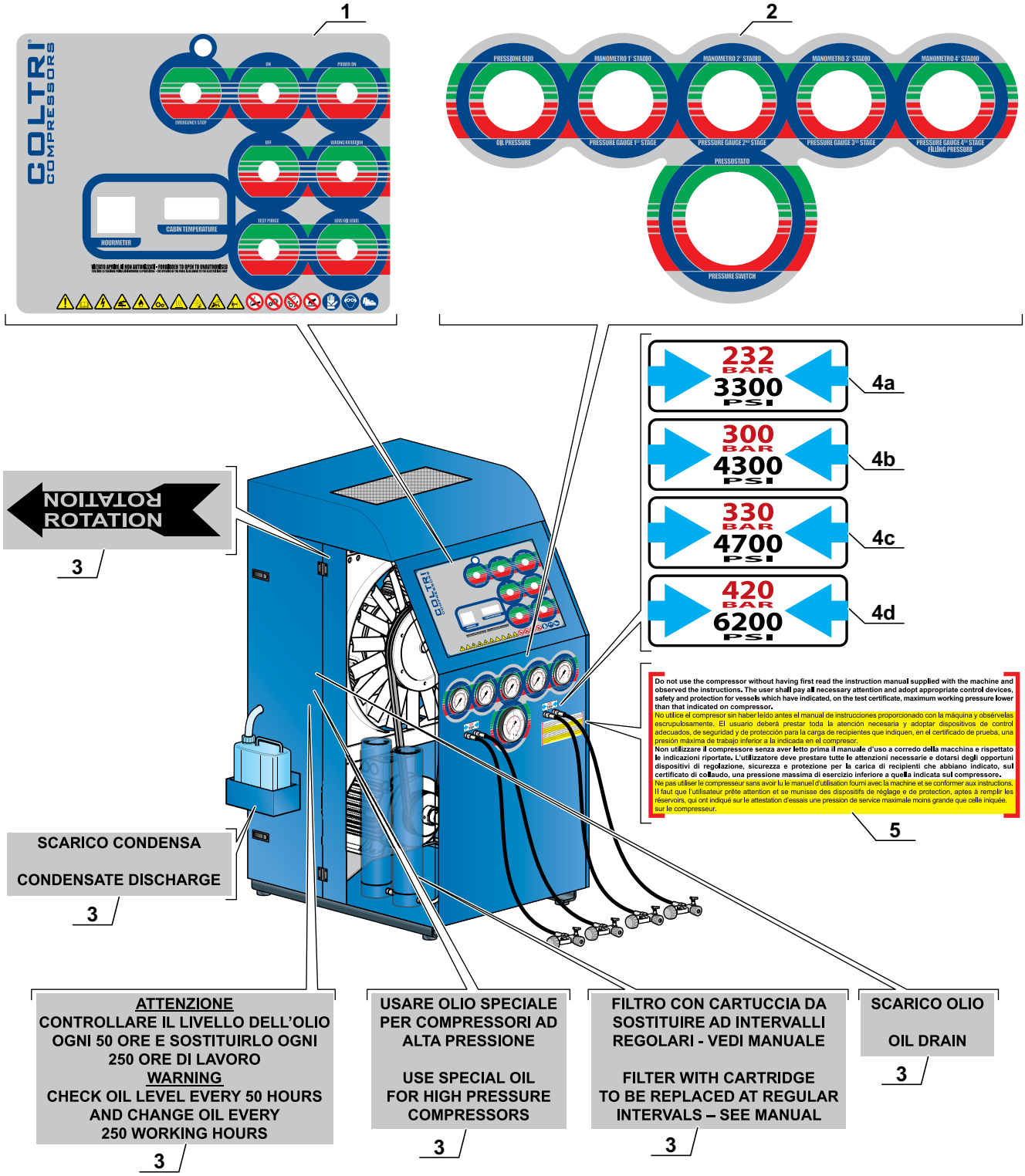

QUADRO ELETTRICO - ELECTRICAL BOARD

Rif. Pos.	Q.tà Q.ty	Codice Code	Descrizione	Description
1	1	20-00-0001	PULSANTE VERDE COMPLETO	COMPLETE GREEN PUSH-BUTTON
2	1	20-00-0002	PULSANTE ROSSO COMPLETO	COMPLETE RED PUSH-BUTTON
3	1	20-00-0003	PULSANTE GIALLO COMPLETO	COMPLETE YELLOW PUSH-BUTTON
4	1	20-00-0008	LUCE BIANCA COMPLETA	COMPLETE WHITE LIGHT
5	1	20-00-0004	LUCE ROSSA COMPLETA	COMPLETE RED LIGHT
6	1	20-00-0005	PULSANTE DI EMERGENZA COMPLETO	COMPLETE EMERGENCY PUSH-BUTTON
7	1	R38HTRR	TERMOSTATO CABINA	CABIN THERMOSTAT
8	1	63223050	CONTAORE	HOUR METER
9	1	3RV20214CA10	INTERRUTTORE PROTEZIONE MOTORE (MCH-30-36)	ENGINE PROTECTION SWITCH (MCH-30-36)
10	2	3RT20241AL20	CONTATTORE LINEA (MCH-30-36)	LINEAR CONTACTOR (MCH-30-36)
11	1	3RT20161AP02	CONTATTORE STELLA (MCH-30-36)	STAR CONTACTOR (MCH-30-36)
12	1	CFM001001182	TRASFORMATORE 100VA	TRANSFORMER 100VA
13	1	DMB51CM24	TEMPORIZZATORE MULTIFUNZIONE	TIMER MULTIFUNCTION
14	1	DCB51CM24	TEMPORIZZATORE PAUSA LAVORO	TIMER PAUSE WORK
15	1	DPA51CM44	SEQUENZA FASI	PHASES SEQUENCE
16	1	3RV20210JA10	INTERRUTTORE AUSILIARIO	AUXILIARY SWITCH
17	1	20-00-0006	RELÈ AUSILIARIO COMPLETO	COMPLETE AUXILIARY RELAY

PULEGGIA MOTORE/CINGHIA DI TRASMISSIONE
ENGINE PULLEY/TRANSMISSION BELT

Compressore Compressor	Motore - Powered by				Puleggia-Pulley		Cinghia-Belt
	Tipo Type	Potenza Power [kW]	Tensione Voltage [V]	Frequenza Frequency [Hz]	Ø [mm]	Codice Code [B]	Codice Code [A]
MCH-22	Trifase Three Phase	7.5	400	50	100	PUL/100/3GOLE	CINGA75
			230	60	110	PUL/110G	CINGA76
MCH-30	Trifase Three Phase	9	400	50	140	36-00-052	CINGA77
			230	60	120	30-05-00100	CINGA76
MCH-36	Trifase Three Phase	11	400	50	140	36-00-052	CINGA77
			230	60	120	30-05-00100	CINGA76
MCH-36 USA	Trifase Three Phase	15	400	50	140	36-00-052	CINGA76
		18	230	60	120	30-05-00100	CINGA76

QUADRO ELETTRICO - ELECTRICAL BOARD

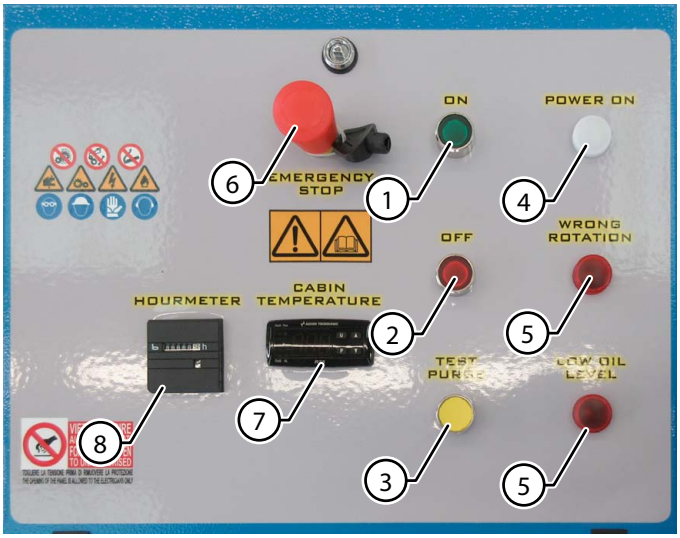

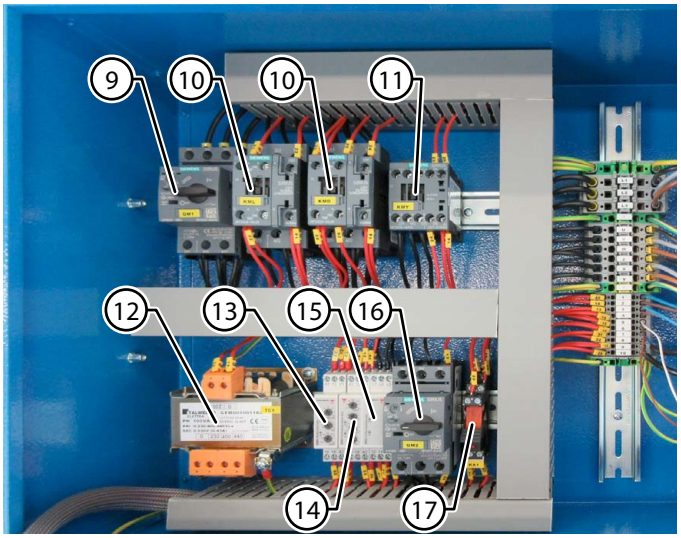

PULEGGIA MOTORE/CINGHIA DI TRASMISSIONE
ENGINE PULLEY/TRANSMISSION BELT

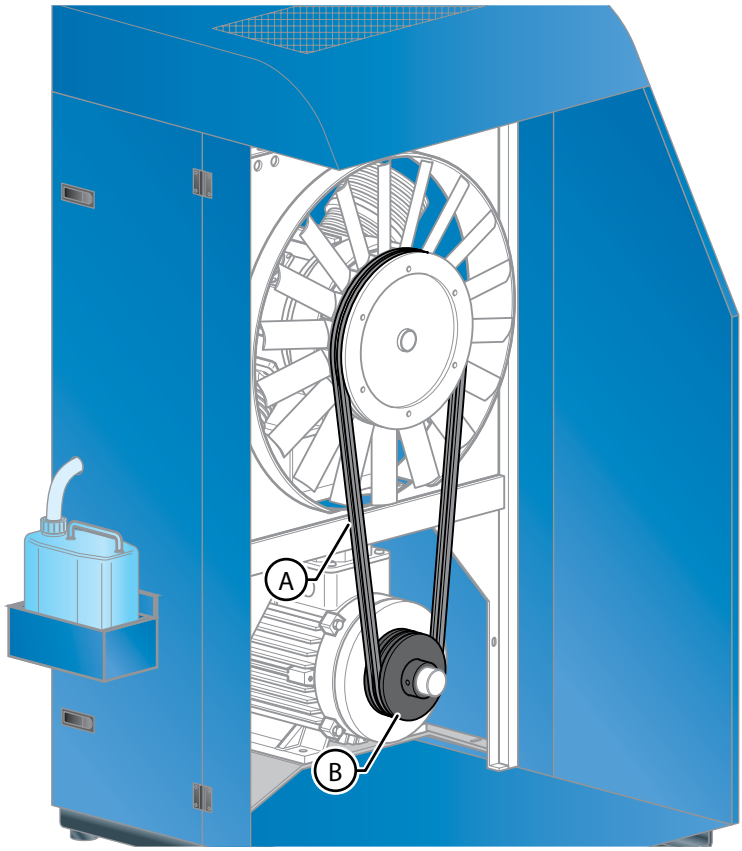

GUARNIZIONI GRUPPO POMPANTE - GASKETS PUMPING GROUP

Rif. Pos.	Q.tà Q.ty	Codice Code	Descrizione	Description
1	10	OR-3137/R	KIT DA 10 O-RING 3137 VITON 90 (34.60X2.62)	KIT WITH 10 O-RING 3137 VITON 90 (34.60X2.62)
2	10	OR-2106/V/V/R	KIT DA 10O-RING 2106 VITON 90 (26,7X1,78)	KIT WITH 10 O-RING 2106 VITON 90 (26,7X1,78)
3	10	OR-2250/R	KIT DA 10O-RING 2250 NBR90SH (63,22X1,78)	KIT WITH 10 O-RING 2250 NBR90SH (63,22X1,78)
4	10	OR-2081/V/90/R	KIT DA 10O-RING 2081 VITON 90 (20.35X1.78)	KIT WITH 10 O-RING 2081 VITON 90 (20.35X1.78)
5	10	OR-2112/V/V/R	KIT DA 10O-RING 2112 VITON 90	KIT WITH 10 O-RING 2112 VITON 90
6	10	13-01-0013/R	KIT DA 10O-RING 3137 NBR90SH (34.60X2.62)	KIT WITH 10 O-RING 3137 NBR90SH (34.60X2.62)
7	10	36-05-052/R	KIT DA 10O-RING 2131 NBR90SH (33.05X1.78)	KIT WITH 10 O-RING 2131 NBR90SH (33.05X1.78)
8	10	36-05-008/R	KIT DA 10 O-RING 2212 NBR90SH (53.67X1.78)	KIT WITH 10 O-RING 2212 NBR90SH (53.67X1.78)
9	10	13-00-0015/R	KIT DA 10 O-RING 2275 NBR90SH (69.57X1.78)	KIT WITH 10 O-RING 2275 NBR90SH (69.57X1.78)
10	10	36-00-013/R	KIT DA 10 O-RING 4125 NBR90SH (31.34X3.53)	KIT WITH 10 O-RING 4125 NBR90SH (31.34X3.53)
11	10	36-02-014/R	KIT DA 10 O-RING 4112 VITON 90 (28.17X3.53)	KIT WITH 10 O-RING 4112 VITON 90 (28.17X3.53)
12	10	13-00-0039/R	KIT DA 10 O-RING 3237 NBR90SH (60.00X2.62)	KIT WITH 10 O-RING 3237 NBR90SH (60.00X2.62)
13	10	36-01-005/R	KIT DA 10 O-RING 2525 NBR90SH (133,10X1,78)	KIT WITH 10 O-RING 2525 NBR90SH (133,10X1,78)
14	10	36-01-023/R	KIT DA 10 O-RING 3256 VITON 90 (64,77X2,62)	KIT WITH 10 O-RING 3256 VITON 90 (64,77X2,62)
15	10	36-01-012/R	KIT DA 10 O-RING FILTRO ASPIRAZIONE MCH-30-36	KIT WITH 10 O-RING INTAKE FILTER MCH-30-36
16	10	36-01-020/R	KIT DA 10 RONDELLE RAME 65X70X1	KIT WITH 10 WASHER COPPER 65X70X1
17	10	36-02-011/R	KIT DA 10 RONDELLE RAME 28X34X1	KIT WITH 10 WASHER COPPER 28X34X1
18	10	13-03-0033/R	KIT DA 10 RONDELLE RAME M8 (8X14X1,5)	KIT WITH 10 WASHER COPPER M8 (8X14X1,5)
19	10	GUAR1319/R	KIT DA 10 RONDELLE RAME 1/4	KIT WITH 10 WASHER COPPER 1/4
20	10	13-00-0053/R	KIT DA 10 GUARNIZIONI RAME 21,5X28X1,5	KIT WITH 10 GASKET COPPER 21,5X28X1,5
21	1	36-06-021	GUARNIZIONE FANGIA POMPA OLIO	GASKET OIL PUMP FLANGE
22	1	36-00-034	GUARNIZIONE FANGIA MONOBLOCCO MCH36	GASKET CRANKCASE FLANGE MCH36
23	1	36-06-005	GUARNIZIONE FILTRO OLIO IN NBR	GASKET OIL FILTER NBR
24	1	36-00-003	GUARNIZIONE BASAMENTO MONOBLOCCO	GASKET CRANKCASE BASE
25a	1	24-01-009	GUARNIZIONE TESTA 1° ST. Ø120MM	GASKET HEAD 1° ST. Ø120MM
25b	1	36-01-009	GUARNIZIONE TESTA 1° ST. Ø130MM	GASKET HEAD 1° ST. Ø130MM

GUARNIZIONI GRUPPO POMPANTE - GASKETS PUMPING GROUP

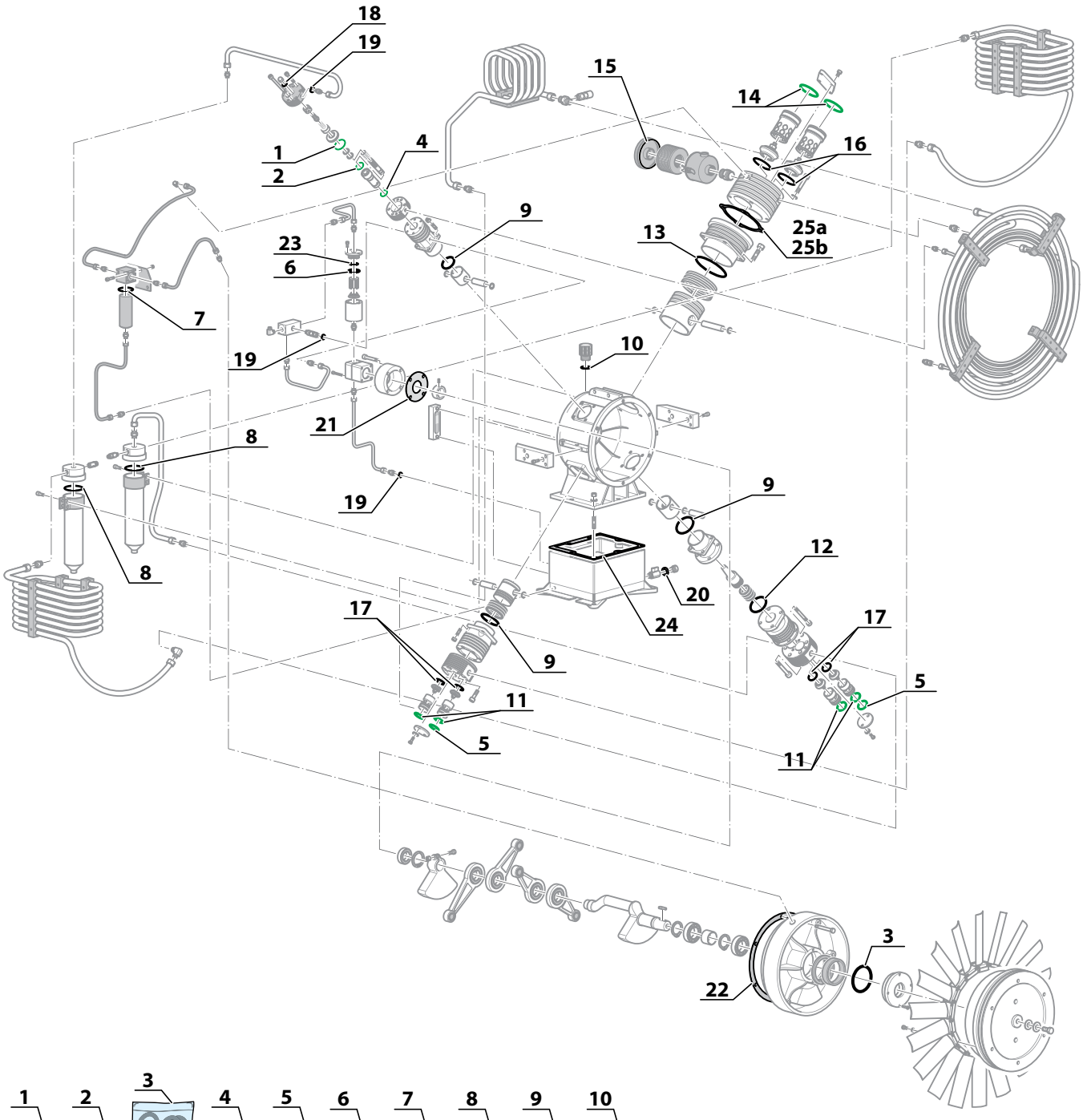

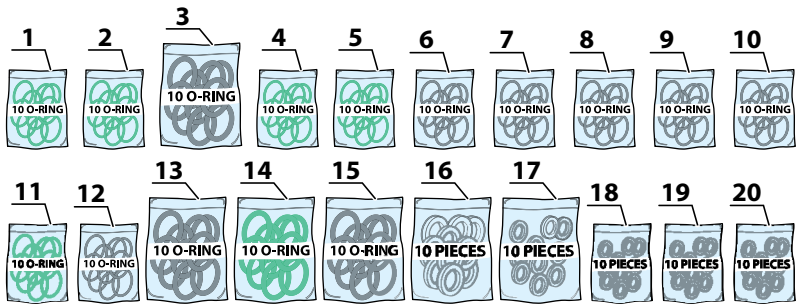

ATTACCHI PER RICARICA BOMBOLE - CYLINDER REFILL CONNECTORS

Rif. Pos.	Q.tà Q.ty	Codice Code	Descrizione	Description
1	1	13-04-0238/420/AIR	FRUSTA DI RICARICA DA 1200MM	REFILL HOSE 1200 MM
2	1	SC000460	RUBINETTO BC DIN 300 BAR SCUBA-VVFFUNI	BC VALVE DIN 300
3	1	SC000470	RUBINETTO B.C. DIN 230 BAR	BC VALVE DIN 230
4	1	SC000450	RUBINETTO B.C. INT	BC VALVE INT
5	1	RE100350	RIDUTTORE DIN/INT	CONNECTOR DIN/INT
6	1	SC000460/M/D300/SP	RUBINETTO BC DIN 300 BAR CON MANOMETRO	BC VALVE DIN 300 WITH PRESSURE GAUGE

OLIO DI LUBRIFICAZIONE E GRASSO AL SILICONE - LUBRICATION OIL AND SILICONE GREASE

Rif. Pos.	Q.tà Q.ty	Codice Code	Descrizione	Description
1	1	SC000430/100	OLIO SINTETICO COLTRI CE 100 (1l)	SYNTHETIC COLTRI OIL CE 100 (1l)
2	1	GRASSO/FGHV	GRASSO SINTETICO ATOSSICO PER TAPPI FILTRO HP	NO-TOXIC SYNTHETIC GREASE FOR CAPS FILTER HP

ATTACCHI PER RICARICA BOMBOLE - CYLINDER REFILL CONNECTORS

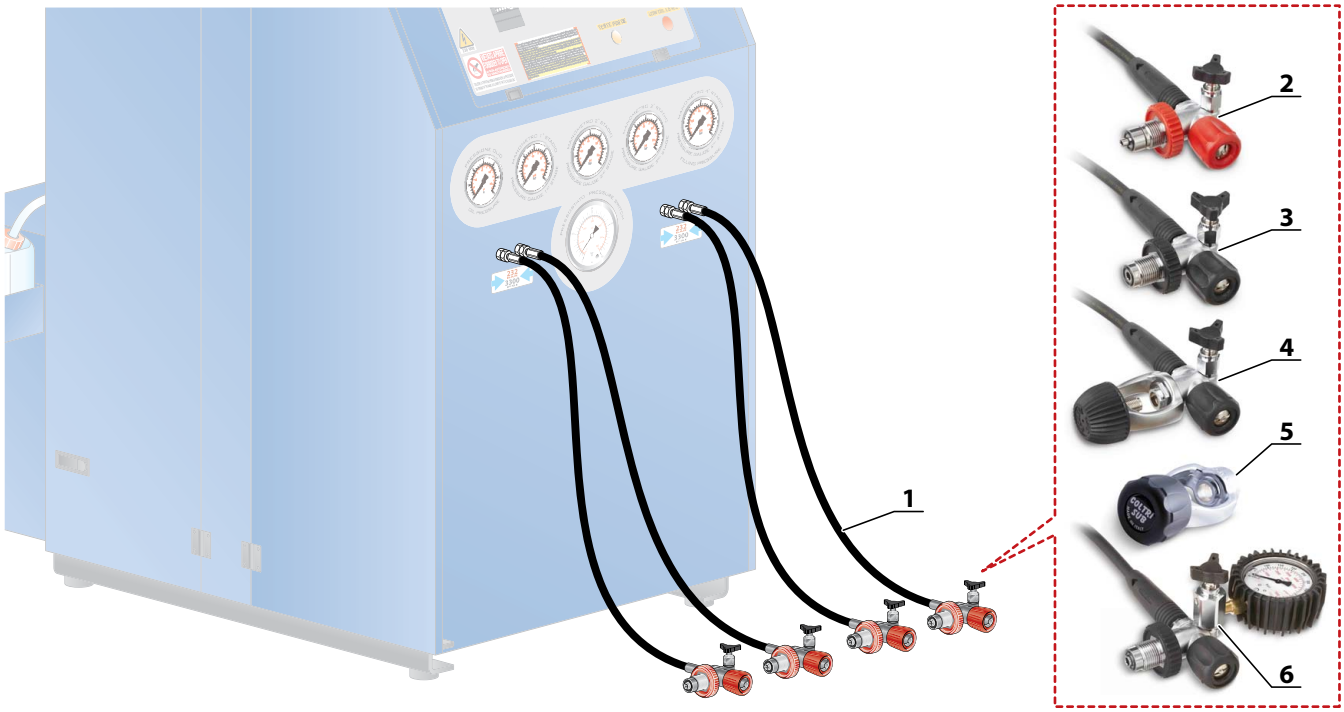

OLIO DI LUBRIFICAZIONE E GRASSO AL SILICONE - LUBRICATION OIL AND SILICONE GREASE





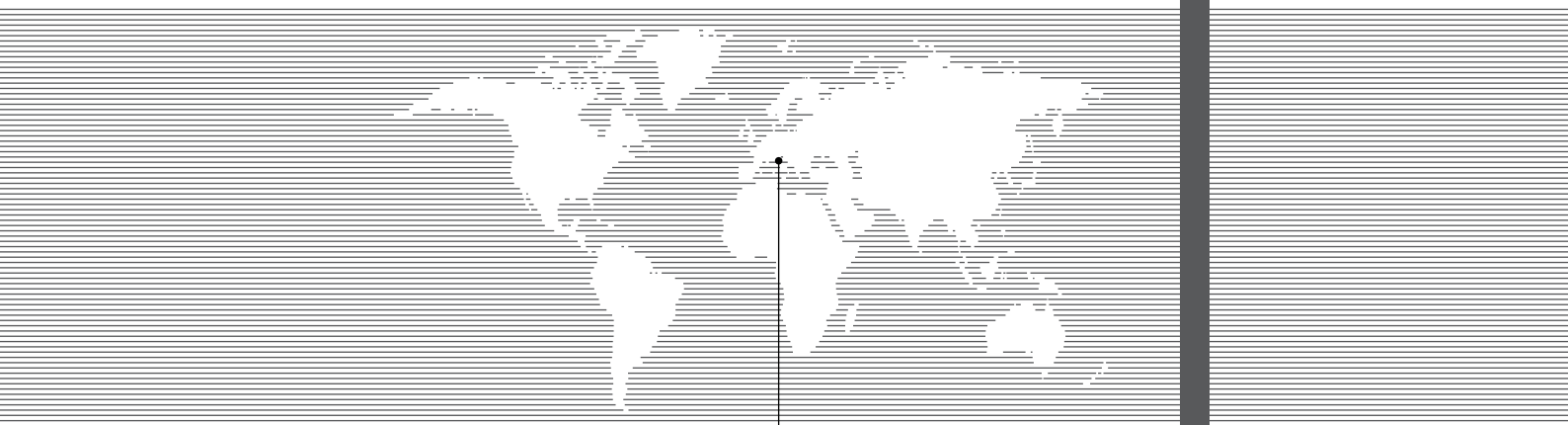

LP-MCH3036-0917

COLTRI COMPRESSORS MADE IN ITALY

AEROTECNICA COLTRI Spa
Via Colli Storici, 177
25015 DESENZANO DEL GARDA (BS) ITALY
Tel. +39 030 9910301 - Fax. +39 030 9910283
www.coltri.com